L-4/T-1/WRE Date : 21/09/2013

BANGLADESH UNIVERSITY OF ENGINEERING AND TECHNOLOGY, DHAKA

L-4/T-1 B. Sc. Engineering Examinations 2011-2012

Sub : **WRE 417** (Groundwater Engineering)

Full Marks: 140 Time : 3 Hours

USE SEPARATE SCRIPTS FOR EACH SECTION

The figures in the margin indicate full marks.

SECTION – A

There are **FOUR** questions in this section. Answer any **THREE**.

1. (a) Show that the water table in steady unidirectional flow in an unconfined aquifer between two water bodies follows a parabolic form. Also discuss the discrepancies. **(10)**

(b) State the assumptions underlying the Theis solution for unsteady flow to a well in a confined aquifer. **(4⅓)**

(c) A 45-cm well penetrates an unconfined aquifer of saturated thickness 30 m completely. Under a steady pumping rate for a long time the drawdowns at two observation wells 15 and 30 m from the pumping well are 5.0 and 4.2 m respectively. If the hydraulic conductivity of the aquifer is 20 m/day, determine the discharge and the drawdown at the pumping well. **(9)**

2. (a) Write short notes on (i) multiple well systems (ii) partial penetration of a well in a confined aquifer. **(6)**

(b) Why is it recommended to conduct recovery test after a pumping test? Explain how the aquifer transmissivity is determined from recovery test data. **(8⅓)**

(c) A well penetrating a confined aquifer was pumped at a constant rate of 2500 m^3/day. The drawdowns during the pumping phase were measured in an observation well 50 m from the pumping well. The data are given below. Determine the aquifer constants S and T by using Cooper-Jacob method. **(9)**

Time (min)	1.0	2.5	5	10	20	50	100	200	500	1000
Drawdown (m)	0.2	0.5	0.8	1.2	1.8	2.5	3.0	3.7	4.4	5.0

3. (a) Briefly describe the different methods of well drilling. Also state the advantages and disadvantages of each method. **(12)**

(b) Preliminary test shows that a tubewell can yield 1800 *l*/min from a confined aquifer between 90-110 m below ground level. The aquifer sand has D_{10}, D_{50} and D_{60} of 0.23, 0.60 and 0.67 mm respectively. (i) Determine the length of the well screen assuming its diameter and effective open area to be 25 cm and 15% respectively. (ii) Design the gravelpack and determine the size of the screen slot. **(11⅓)**

4. (a) What are the causes of saline water intrusion in aquifer? **(4)**

(b) Derive the Ghyben-Herzberg relation for sea water intrusion and indicate its limitations. **(6)**

(c) What are the purposes of groundwater basin investigation? Briefly discuss the different levels of groundwater management studies. **(8⅓)**

(d) What are the causes of failure of a well and what remedial measures are suggested for each case? **(5)**

Contd P/2

WRE 417

SECTION – B

There are **FOUR** questions in this section. Answer any **THREE**.

5. (a) Define: confined aquifer, specific storage, storage coefficient, and dispersion. **(6)**

(b) Show a diagram illustrating the interrelations of genetic types of water. **(5⅓)**

(c) Derive the general partial differential equation for unsteady flow of ground water in the horizontal direction. **(6)**

(d) A tracer test was performed for a soil with grain density and bulk density of 2.60 g/cm^3 and 1.70 g/cm^3, respectively. The hydraulic gradient measured was 0.015 m/m and the average interstitial velocity was 0.30 m/day. Determine the hydraulic conductivity. **(6)**

6. (a) Explain the process of locating new production well by using contour maps of ground water levels together with flow lines. **(6)**

(b) Discuss the recharge well method for artificial recharge of ground water. **(6)**

(c) What are the industrial sources and causes of ground water pollution? **(5⅓)**

(d) For unsaturated ground water flow in an aquifer, the measured soil-water pressure (tension) was 0.50 m of water. Saturated thickness of the aquifer is 80 m. Determine transmissivity and unsaturated hydraulic conductivity. Given K = 70 m/day, $a = 5\times10^9$, $b = 10^7$ and n = 5. **(6)**

7. (a) What is recharge mound? Describe a procedure to compute the shape of a recharge mound with relevant figure. What are the assumptions underlying the computation of mound geometry? **(10)**

(b) Illustrate the interrelations of ground water table levels, recharge and evaportranspiraton fluctuations with a neat sketch. **(6)**

(c) Describe the surface geophysical methods for ground water exploration. **(7⅓)**

8. (a) Briefly explain the schematic diagram of transient relationships between recharge rates, discharge rates, and withdrawal rates. How can the maximum stable basin yield be estimated from this diagram? **(10)**

(b) How lowering a piezometric surface may result in land subsidence? Explain with figures. **(8⅓)**

(c) Explain the concept of 'safe yield' and 'optimal yield' of a ground water basin with examples. **(5)**

L-4/T-1/WRE Date : 05/10/2013

Checked 5/10/13

BANGLADESH UNIVERSITY OF ENGINEERING AND TECHNOLOGY, DHAKA

L-4/T-1 B. Sc. Engineering Examinations 2011-2012

Sub : **WRE 427** (GIS and Remote Sensing)

Full Marks : 140 Time : 3 Hours

The figures in the margin indicate full marks.

USE SEPARATE SCRIPTS FOR EACH SECTION

SECTION – A

There are **FOUR** questions in this section. **Q. No. 1is compulsory** and answer any **TWO** from the rest.

1. (a) Explain various types of map projections based on the pattern of deformation or distortion. **(10)**

   (b) What are the models used in GIS to represent surface. Explain those models. **(10)**

   (c) Explain various types of vector entity errors. How those errors are created, detected and edited? **(10)**

2. (a) What are the advantages of using GIS in different areas? **(5)**

   (b) Define various types of GIS data according to the level of measurement. **(5)**

   (c) Explain the UTM coordinate system. **(5)**

   (d) Explain the location **48NYK8844** using Military grid coordinate system. Draw necessary figure. **(5)**

3. (a) Write down the advantages and disadvantages of raster data structure. **(5)**

   (b) What is quad tree? Explain it with figure. **(5)**

   (c) Explain the spaghetti model used for vector data in GIS. **(5)**

   (d) Explain how the queries are performed on a GIS database to retrieve data. **(5)**

4. (a) What is rubber sheeting? How it is created, detected and edited? **(5)**

   (b) Explain the polygon on polygon overlay used for vector data. **(5)**

   (c) Explain the digitizing process in GIS using digitizing tablet. **(10)**

SECTION – B

There are **FOUR** questions in this section. Answer any **THREE**.

5. (a) Do you think remote sensing is an application of photogrammetry or not? Explain with proper reasons. **(5 ⅓)**

   (b) Write short notes on (i) A super sensor (ii) A noninterfering atmosphere. **(5)**

   (c) Why GIS is required in remote sensing? **(4)**

   (d) Write the applications of Ultraviolet, Visible light and Microwave radiations. **(9)**

Contd P/2

WRE 427

6. (a) "Objects on the ground are not always a black body radiator" – explain. **(5+3)**

An object emits temperature 1000 °K in an atmosphere. The atmospheric particle diameter ranges 5 μm - 100 μm. Which type of scattering occurs from the object?

(b) Which type of scattering mechanism is dominant in the upper atmosphere? Describe with example. **(4)**

(c) What do you mean by (i) Atmospheric window (ii) Lambertian reflectors (iii) Spectral reflectance (iv) Radiant intensity. **(6)**

(d) How EMR interacts with surface and near surface objects? Discuss with sketch. **(5 ⅓)**

7. (a) Distinguish between: **(10)**

(i) FOV and IFOV

(ii) SLAR and SAR

(iii) Active sensor and passive sensor

(iv) Dwell time and temporal resolution.

(b) What is optical sensor? Tabulate classification of passive sensor. **(4)**

(c) Write short notes with sketches on: **(6)**

(i) Circular scanners

(ii) Side-scanning system

(d) A cross-track scanner captures 3500 cells on a single line at 0.03 sec.cell^{-1} while an along track scanner moving at a velocity of 300 m/s captures cells of dimension 15 m cell^{-1}. Calculate dwell time for both scanner. **(3 ⅓)**

8. (a) Write short notes on: **(7)**

(i) Image rectification and restoration

(ii) Image classification

(iii) Typical attitude sensors for aircraft

(b) What is optical mechanical scanner? Write the function of the elements of an optical mechanical scanner. **(6 ⅓)**

(c) What is ground control station? Show major elements of the JERS-1 system with neat sketch. **(5)**

(d) Compare sun synchronous orbit system with that of geosynchronous orbit system of remote sensing satellite. **(5)**

Opacaisar
09/09/13

L-4/T-1/WRE Date : 06/07/2013

BANGLADESH UNIVERSITY OF ENGINEERING AND TECHNOLOGY, DHAKA

L-4/T-1 B. Sc. Engineering Examinations 2011-2012

Sub : **CE 411** (Structural Analysis and Design III)

Full Marks : 280 Time : 3 Hours

The figures in the margin indicate full marks.

Assume reasonable values for missing data, if any.

The symbols carry their usual meaning.

USE SEPARATE SCRIPTS FOR EACH SECTION

SECTION – A

There are **FOUR** questions in this section. Answer any **THREE**.

1. (a) Define the following terms: (i) Stiffness (ii) Fixed End Moments (iii) Carry over moment. **(9)**

   (b) The prismatic beam AB shown in Figure 1 is subjected to a displacement, Δ at end B with respect to end A. (i) Calculate end moments M_{AB} and M_{BA} from the basics. (ii) If one end of the member is simply supported, calculate the moment at the fixed end. **($14\frac{1}{3}$)**

   (c) For the loaded frame shown in Figure 2 find the member end moments. Use moment distribution method. **($23\frac{1}{3}$)**

2. Analyse the frame shown in Figure 3 by the method of moment distribution. In the figure the relative k-value for each member of the loaded one-story bent with an inclined leg is encircled. **($46\frac{2}{3}$)**

3. (a) Derive the slope deflection equations. **(10)**

   (b) Find end moments of the stepped beam shown in Figure 4 using slope deflection method. Also draw the bending moment diagram. **($36\frac{2}{3}$)**

4. (a) Analyse the portal frame shown in Figure 5 and find the end moments. Use slope deflection method. **($16\frac{2}{3}$)**

   (b) Draw influence lines for M_A, M_B, M_C, Δ_A, V_A and R_B in the continuous beam shown in Figure 6. **(30)**

Contd P/2

CE 411 (WRE)

SECTION – B

There are **FOUR** questions in this section. Answer any **THREE**.

5. For the plane truss in Fig. 7, determine the nodal coordinate matrix, member connectivity matrix, combined load matrix, member stiffness matrix and global stiffness matrix. **(46⅔)**

6. (a) Analyze the beam shown in Fig. 8 using flexibility method and draw shear force and bending moment diagrams. Neglect axial deformation. I = 2000 in^4 (both spans); E = 3000 ksi. **(23⅔)**

   (b) Compute the stiffness matrix and member force vector for the grid shown in Fig. 9. Neglect torsion and axial deformation. EI constant. **(23)**

7. (a) Derive the stiffness matrix for the frame shown in Fig. 10. Consider axial deformation. Take E = 3000 ksi. **(26⅔)**

   (b) Calculate deformation of the free degrees of freedom of the beam shown in Fig. 11. Assume EI constant for the entire beam. **(20)**

8. (a) What are the advantages of stiffness method over flexibility method? **(9⅔)**

   (b) Find D.O.K.I. for the structures shown in Fig. 12. Show their directions. Neglect axial and torsional deformation. **(12)**

   (c) Calculate deformation of the free degrees of freedom of the frame shown in Fig. 13. Ignore axial deformation. **(25)**

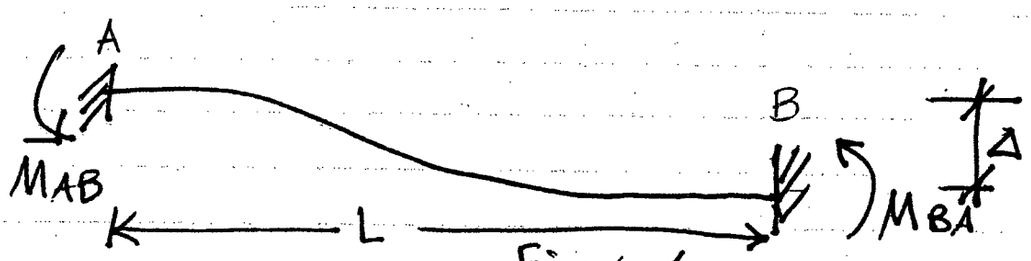

Figure 1

QUESTION 1(b).

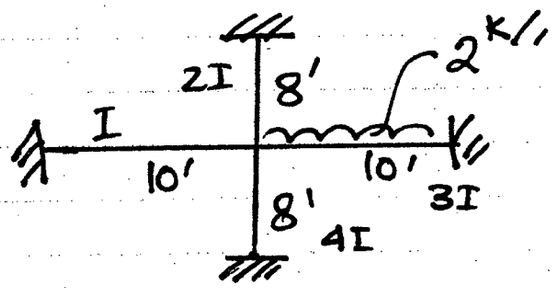

Figure 2

Question 1(c)

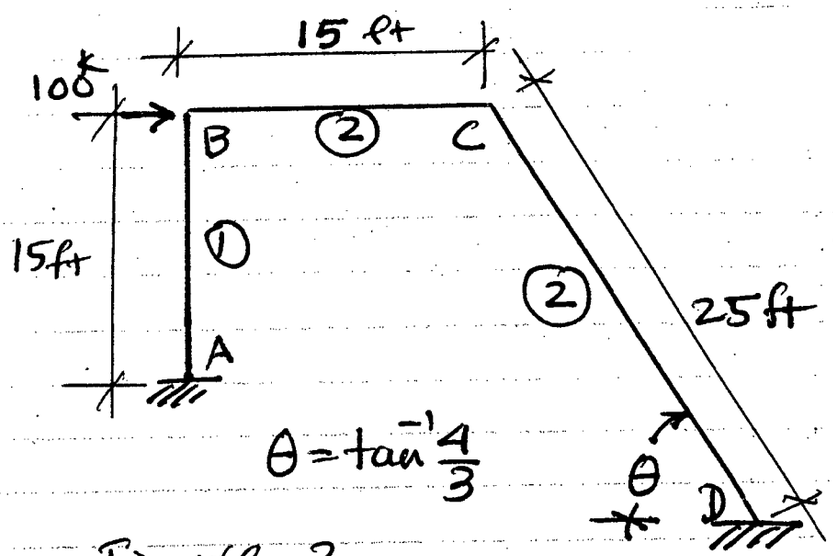

Figure 3

QUESTION 2.

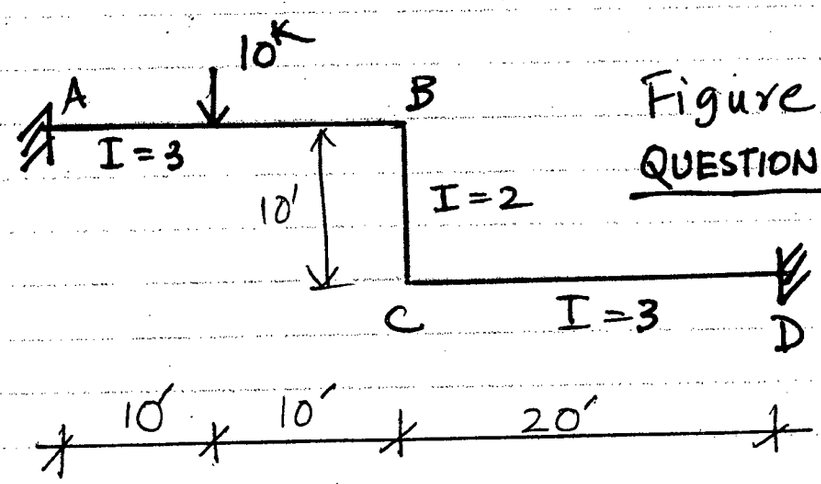

Figure 4

QUESTION 3(b)

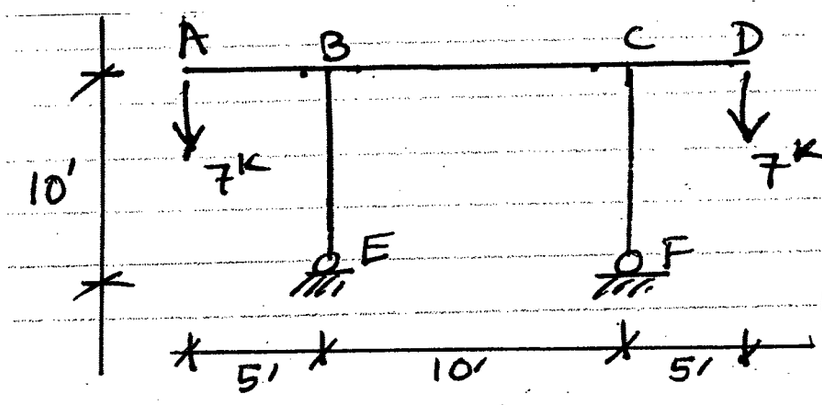

Figure 5

Question 4(a)

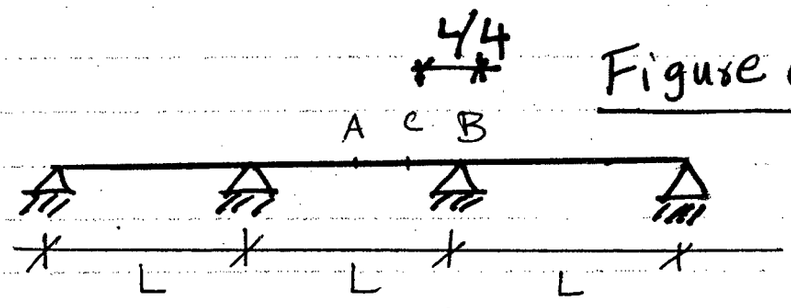

Figure 6

Question 4(b)

EI Constant.

L/2

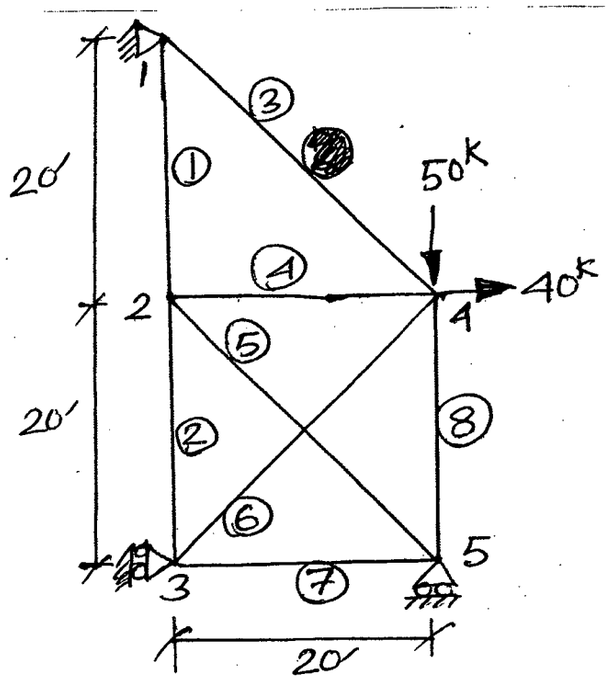

Fig. 7

QUESTION 5.

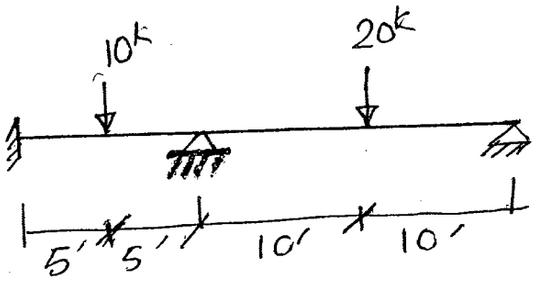

Fig 8:
Question 6 (a)

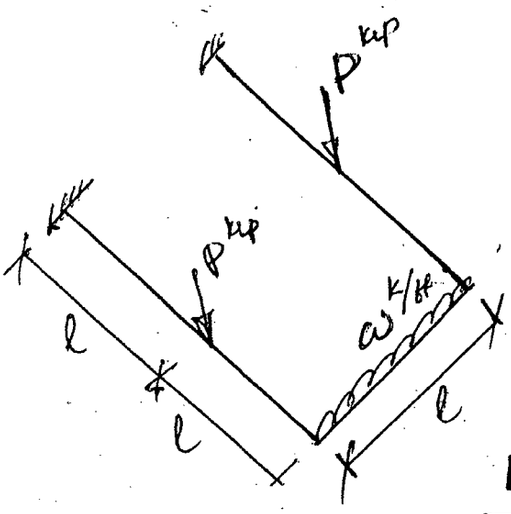

Figure 9. (Question 6 (b)).

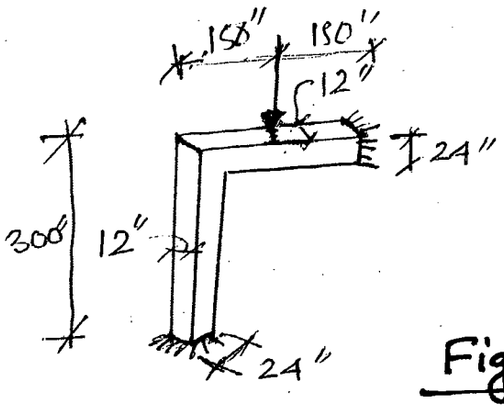

Figure 10 (Question 7(a))

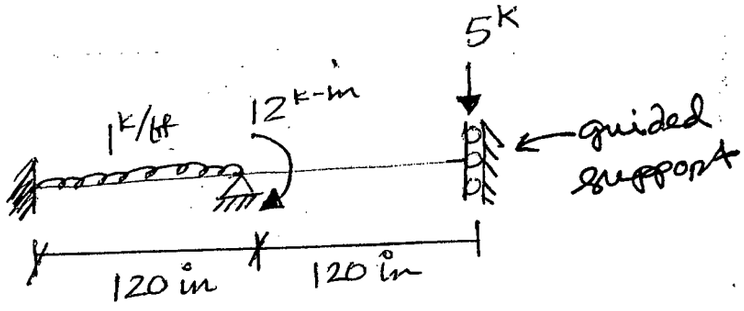

Figure 11 (Question 7(b))

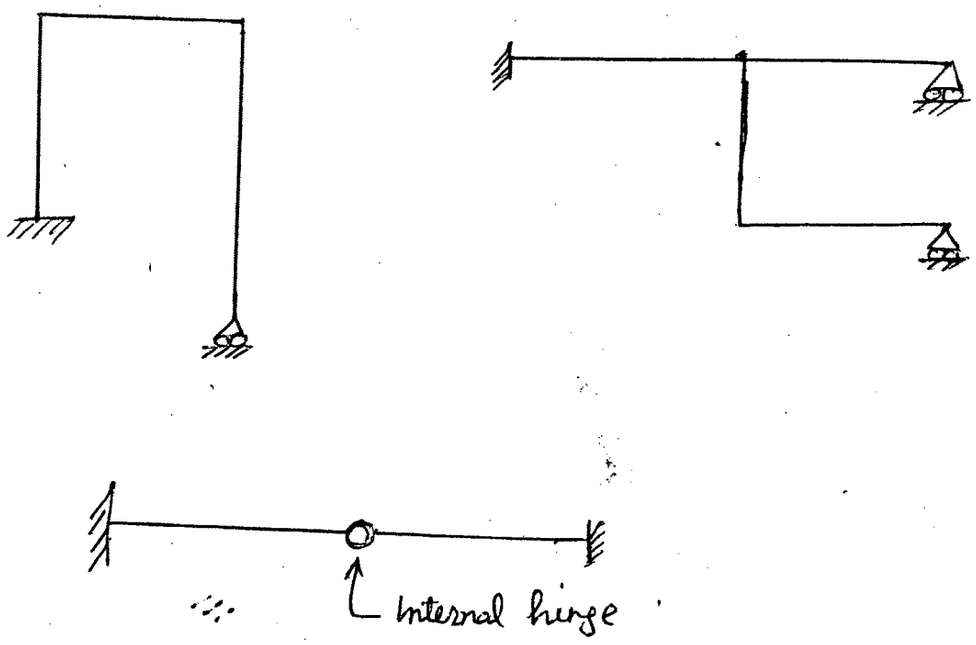

Figure 12 for Question 8 (b).

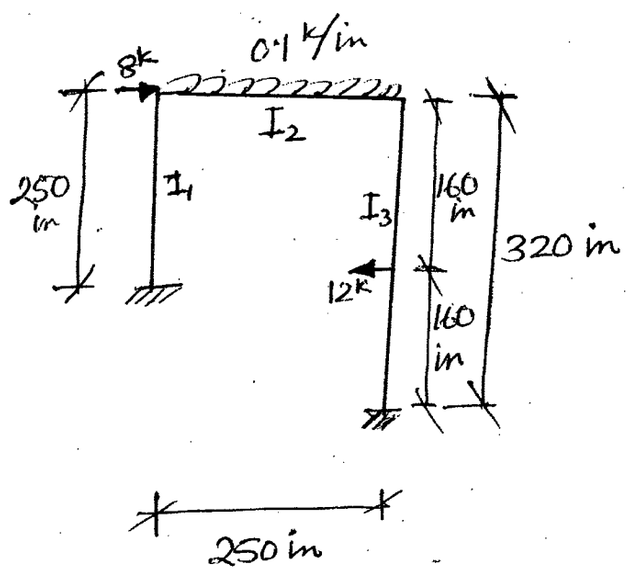

$E = 3000$ ksi

$I_1 = I_2 = 1200$ in^4.

$I_3 = 1500$ in^4.

Figure 13 for Question 8 (c)

15/07/13

L-4/T-1/WRE **Date : 23/07/2013**

BANGLADESH UNIVERSITY OF ENGINEERING AND TECHNOLOGY, DHAKA

L-4/T-1 B. Sc. Engineering Examinations 2011-2012

Sub : **WRE 415** (Water Resources Planning and Construction Management)

Full Marks : 210 Time : 3 Hours

The figures in the margin indicate full marks.

USE SEPARATE SCRIPTS FOR EACH SECTION

SECTION – A

There are **FOUR** questions in this Section. Answer any **THREE**.

1. (a) Write down key activities of Institutional responsibilities and arrangements in the Planning processes in Bangladesh. **(10)**

   (b) What are the critical factors affecting project planning and management? **(5)**

   (c) Write down the various stages of Project Planning. **(10)**

   (d) Draw a flow chart showing various phases of National IWRM planning and implementing. **(10)**

2. (a) What do you mean by Water Resources Management (WRM)? Write down the main tasks of WRM. **(5)**

   (b) Discuss briefly the various stages of implementation program for the assessment of water resources. **(10)**

   (c) What do you mean by water resources system? Give an example with sketches of a good river basin system with its various interdependent components. **(10)**

   (d) "System Modelling is essential for planning and management of water resources project"-Justify the statement. **(10)**

3. (a) Write brief notes on "techniques and tools" used in Water Resources Assessments (WRA). **(10)**

   (b) What are the methods available for Project formulations? Categorize project stakeholders. **(10)**

   (c) Briefly explain various steps of conducting "Stakeholder Analysis" for Project formulation. **(15)**

4. (a) What is logical framework analysis? Tabulate the contents of the LogFrame Matrix. **(15)**

   (b) How you will measure the performance of a project related to water resources system? What are the criteria of overall measures of system performance? **(10)**

   (c) What are the components of Financial costs of a Project? **(5)**

   (d) What are the general policies of cost allocation for project?

Contd P/2

WRE 415

SECTION – B

There are **FOUR** questions in this Section. Answer any **THREE**.

5. (a) What are the objectives of construction management? **(10)**

(b) Write down the stages in Construction. Briefly explain the purpose and activities of each stage. **(12)**

(c) The three time estimates: the optimistic time, the most likely time, pessimistic time (t_0, t_m, t_p) are given in weeks in the diagram for each activity: **(13)**

(i) Determine the critical path and the expected time required for the completion of the project.

(ii) Calculate the probability of completing the project in 20 weeks.

(iii) Calculate the project completion time assuming the probability to be 90%.

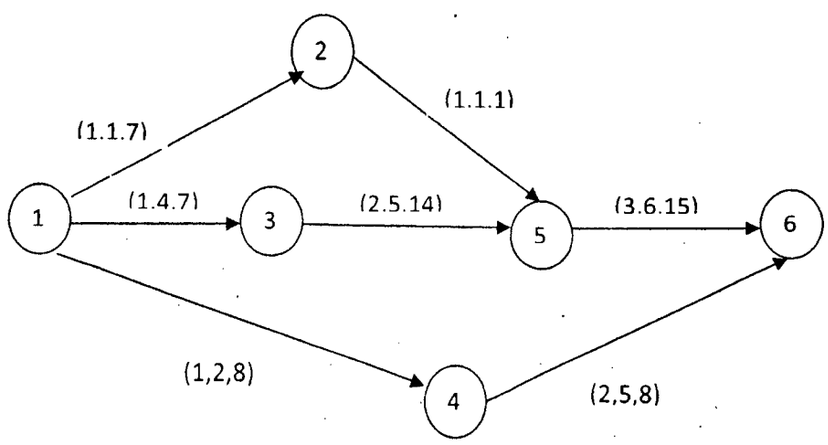

6. (a) Define Quality control (QC) and Quality assurance (QA). How can these are carried out in any construction work. **(12)**

(b) Explain the six basic steps of planning and scheduling of construction projects. **(12)**

(c) What is a bar chart? What are the limitations of bar chart? Draw a bar chart for the following restaurant project. **(11)**

Activity	Description	Duration (weeks)
A	Select and purchase site	2
B	Purchase coaches	10
C	Purchase restaurant equipments	3
D	Hire personnel	2
E	Obtain permits and licenses	6
F	Site preparation	3
G	Move coaches to the site	5
H	Install utilities	4

Contd P/3

WRE 415

Contd ... Q. No. 6(c)

L	Advertise and promote	3
I	Install equipments	4
J	Decorate	3
M	Train personnel	4
K	Stock bar and kitchen	6
N	Undertake pilot operation	7

7. (a) Define productivity. Mathematically show that the relationship between productivity and total cost is non-linear. What implication does this relationship has for project managers. **(12)**

(b) What do you mean be WBS? What are the guidelines for establishing WBS? Show the WBS for construction of a bridge. **(11)**

(c) The total daily quantity needed for the production of a certain product is 100,000 units and the productivity is 100 units per hr. If the hourly cost of this product is 150 Tk. then calculate the total estimated cost of this product under (i) current condition (ii) if the productivity is 50% of current productivity (iii) if the productivity is 25% of the current condition. Graphically represent the results. **(12)**

8. (a) Write short notes on: **(3×4=12)**

(i) Safety program in construction project

(ii) Dummy activity

(iii) Human factor in construction project

(iv) Optimistic and modal time

(b) Briefly explain any 3 functions of construction management. **(9)**

(c) Find the critical path and time required for completing the following project. **(14)**

Activity	Description	Duration (weeks)
1	Design product	6
2	Packaging	2
3	Order and receive components for product	3
4	Order and receive materials for packaging	2
5	Assemble products	4
6	Prepare packaging	1
7	Package products	1
8	Test market products	6
9	Revise products	3
10	Revise packaging	1
11	Present results to board	1

Contd P/4

WRE 415

Contd ... Q. No. 8(c)

The following information is also given:

Activity no		Activity no	
1	Must be completed before	3	Can start
2		4	
3		5	
4		6	
5,6		7	
7		8	
8		9	
8		10	
9,10		11	

WRE 415

Table . Standard Normal Distribution Function

Z (+)	Probability (P_r)(%)	Z (−)	Probability (P_r) (%)
0	50·0	0	50·0
+0·1	53·98	−0·1	46·02
+0·2	57·93	−0·2	42·07
+0·3	61·79	−0·3	38·21
+0·4	65·54	−0·4	34·46
+0·5	69·15	−0·5	30·85
+0·6	72·57	−0·6	27·43
+0·7	75·80	−0·7	24·20
+0·8	78·81	−0·8	21·19
+0·9	81·59	−0·9	18·41
+1·0	84·13	−1·0	15·87
+1·1	86·43	−1·1	13·57
+1·2	88·49	−1·2	11·51
+1·3	90·32	−1·3	9·68
+1·4	91·92	−1·4	8·08
+1·5	93·32	−1·5	6·68
+1·6	94·52	−1·6	5·48
+1·7	95·54	−1·7	4·46
+1·8	96·41	−1·8	3·59
+1·9	97·13	−1·9	2·87
+2·0	97·72	−2·0	2·28
+2·1	98·21	−2·1	1·79
+2·2	98·61	−2·2	1·39
+2·3	98·93	−2·3	1·07
+2·4	99·18	−2·4	0·82
+2·5	99·38	−2·5	0·62
+2·6	99·53	−2·6	0·47
+2·7	99·65	−2·7	0·35
+2·8	99·74	−2·8	0·26
+2·9	99·81	−2·9	0·19
+3·0	99·87	−3·0	0·13

For Q 5(c)

L-4/T-1/WRE Date : 28/09/2013

BANGLADESH UNIVERSITY OF ENGINEERING AND TECHNOLOGY, DHAKA

L-4/T-1 B. Sc. Engineering Examinations 2011-2012

Sub : **WRE 419** (Irrigation and Drainage Engineering)

Full Marks : 210 Time : 3 Hours

The figures in the margin indicate full marks.

USE SEPARATE SCRIPTS FOR EACH SECTION

SECTION – A

There are **FOUR** questions in this section. Answer any **THREE**.

1. (a) Explain the terms (i) field capacity and (ii) permanent wilting point and discuss how these parameters can be determined in the field. **(10)**

(b) Why is measurement of soil moisture important? Compare Time Domain Reflectrometry with Neutron method of soil moisture measurement. **(9)**

(c) Piezometers a, b and c were installed side by side in a field at depths 6, 12 and 20 m below the ground surface. The pressure heads are 8, 13.5 and 20.5 m respectively A, B and C represent the points of measurement of piezometers a, b and c. Calculate (i) the hydraulic gradients between A and B and between B and C (ii) the hydraulic conductivity from A to B if the hydraulic conductivity between B to C is 3 cm/h. **(8)**

(d) Determine the field capacity of a soil for the following data: **(8)**

Depth of roof zone = 90 cm, moisture content at the time of irrigation = 8%, bulk density of soil = 1.4 g/cc, volume of water applied to the field = 400 m^3, application loss = 30% and area irrigated = 0.12 ha.

2. (a) What is meant by (i) consumptive use (ii) effective rainfall? List the factors affecting them. **(8)**

(b) Describe with sketches the different types of lysimeter used to determine consumptive use of a crop. **(9)**

(c) Explain why the concept of water-application, water-storage and water-distribution efficiencies should be used to evaluate field irrigation practices. **(6)**

(d) Rice is grown in an irrigation scheme and monthly ET_o, R_e and K_c values are given below. The seepage and percolation loss from the rice field is 4 mm/day. The scheme irrigation efficiency is 70%. Calculate the monthly scheme irrigation requirement in l/s per ha assuming that the irrigation water supply is available for 20 hours per day. **(12)**

Month	December	January	February	March	April
ET_o, mm/day	2.4	3.1	5.2	6.3	6.1
R_e, mm	0	0	15	25	30
K_c	1.0	1.0	1.2	1.2	1.1

Contd P/2

WRE 419

3. (a) Briefly describe with sketches and give advantages and disadvantages of various types of surface irrigation. **(12)**

(b) Define on-farm water management and discuss its various aspects. **(12)**

(c) A stream of 100 l/s was delivered to a field of 2 ha for 8 hours. The root zone depth was 1.2 m. The runoff averaged 50 l/s for 4 hours. The average depth of water penetration in each $\frac{1}{4}$ ha segment of the field was : 0.8, 1.0, 1.1, 1.2, 0.9, 0.9, 1.1 and 1.2 m. Determine the water-application, water-storage and water-distribution efficiencies. **(11)**

4. (a) Write short notes on (i) Canal regulators (ii) Cut-throat flume (ii) Canal escapes. **(3×4=12)**

(b) Describe with a sketch the working principle of a centrifugal pump. Give a comparison between a shallow tubewell pump and a deep tubewell pump. **(9)**

(c) Name the different types of cross-drainage works and state the conditions under which each one is used. **(6)**

(d) A pump lifts 200 m^3 of water per hour against a total head of 15 m. Compute the cost of energy in a month of 30 days if the pump is operated 16 hours a day and electric cost is Tk. 4.50 per unit. Assume that the pump and motor have efficiencies of 70% and 90% respectively. **(8)**

SECTION – B

There are **FOUR** questions in this section. Answer any **THREE**.

5. (a) State the social and economic considerations while developing any water resources project. **(5)**

(b) Discuss various methods of canal alignment with neat sketches. **(10)**

(c) Write short notes on (i) National water policy of Bangladesh (ii) Water right (iii) Environmental aspects of irrigation. **(10)**

(d) Write down the various design criteria for designing open drain. **(10)**

6. (a) What are the ill-effects of water logging on soil? **(5)**

(b) Briefly describe the distribution system for canal irrigation. **(10)**

(c) Discuss the methods of land reclamation for restoring the cultivable lands that have become saline. **(10)**

(d) The gross command area of a distributory is 12300 ha, 65% of which is cultivable. The intensity of irrigation for Rabi season is 60% and Kharif season is 40%. The average duty at the head of the distributory is 1875 ha/cumec for Rabi season and 720 ha/cumec for Kharif season. The kor depth and period for Rabi crops are 20 cm and 3.5 weeks respectively and for Kharif crop are 26 cm and 2 weeks respectively. Assuming a time factor of 0.70, determine the design discharge at the canal outlet. **(10)**

Contd P/3

WRE 419

7. (a) What are the considerations for using surface water as a source of irrigation water? **(5)**

(b) Write down the purposes of berm when it is fully formed. What are the factors on which seepage loss depend? **(10)**

(c) With neat sketches show (i) absorption type channel loss (ii) shapes of the final regime channels carrying sediments of different sizes (iii) borrow pit (iv) back berm (v) tile drain with graded filter in a pervious soil. **(10)**

(d) Design a regime channel for a discharge of 1650 cusec and average particle size 0.022 cm, using Lacey's Theory. **(10)**

8. (a) Differentiate between the main features of direct irrigation scheme and storage irrigation scheme. **(5)**

(b) Discuss the quality of irrigation water in context to (i) potentially toxic elements (ii) concentration of soluble salts. **(10)**

(c) Discuss various advantages of lining of earthen irrigation canal. **(10)**

(d) A tile drain has to be designed with the data given below: **(10)**

Drainage coefficient = 4.2 cm/day

Depth of highest position of water table below land surface = 3.40 m

Depth of top surface of drain below land surface = 4.65 m

Depth of impervious layer from land surface = 18.0 m

Permeability of soil = 1.2×10^{-4} m/s

Tile grade = 0.42%

Drainage area = 22.5 ha

Manning's roughness coefficient = 0.022

Determine the size and spacing of this drain.