L-1/T-2/MME **Date : 29/06/2015**

BANGLADESH UNIVERSITY OF ENGINEERING AND TECHNOLOGY, DHAKA

L-1/T-2 B. Sc. Engineering Examinations 2013-2014

Sub : **ME 141** (Engineering Mechanics)

Full Marks: 210 Time : 3 Hours

USE SEPARATE SCRIPTS FOR EACH SECTION

The figures in the margin indicate full marks.

SECTION – A

There are **FOUR** questions in this section. Answer any **THREE**.

1. (a) Collar A as shown in Fig. Q. 1(a) starts from rest and moves upward with a constant acceleration. Knowing that after 8 s the relative velocity of collar B with respect to collar A is 24 in./s., determine **(18)**
   (i) the accelerations of A and B
   (ii) the velocity and the change in position of B after 6 s.

   (b) Water flows as shown in Fig. Q. 1(b) from a drain spout with an initial velocity of 2.5 ft/s at an angle of 15° with the horizontal. Determine the range of values of the distance d for which the water will enter the trough BC. **(17)**

2. (a) Block B of mass 10 kg rests as shown in Fig. Q. 2(a) on the upper surface of a 22 kg wedge A. Knowing that the system is released from rest and neglecting friction, determine **(18)**
   (i) the acceleration of B
   (ii) the velocity of B relative to A ar t = 0.5 s.

   (b) A 1 kg collar as shown in Fig. Q. 2(b) can slide on a horizontal rod which is free to rotate about a vertical shaft. The collar is initially held at A by a cord attached to the shaft. A spring of constant 30 N/m is attached to the collar and to the shaft and is undeformed when the collar is at A. As the rod rotates at the rate $\dot{\theta} = 16$ rad/s, the cord is cut and the collar moves out along the rod. Neglecting friction and the mass of the rod, determine **(17)**
   (i) the radial and transverse components of the acceleration of the collar at A
   (ii) the acceleration of the collar relative to the rod at A
   (iii) the transverse component of the velocity of the collar at B.

3. (a) A 2 kg collar as shown in Fig. Q. 3(a) is attached to a spring and slides without friction in a vertical plane along the curved rod ABC. The spring is undeformed when he collar is at C and its constant is 600 N/m. If the collar is released at A with no initial velocity, determine its velocity **(15)**
   (i) as it passes through B
   (ii) as it reaches C.

Contd P/2

17

ME 141/MME

Contd... Q. No. 3

(b) Ball B as shown in Fig. Q. 3(b) is hanging from an inextensible cord. An identical ball A is released from rest when it is just touching the cord and drops through the vertical distance h_A = 8 in. before striking ball B. Assuming e = 0.9 and no friction. Determine the resulting maximum vertical displacement h_B of the ball B. **(20)**

4. (a) A 40 lb block B as shown in Fig. Q. 4(a) is suspended from a 6 ft cord attached to a 60 lb cart A, which may roll freely on a frictionless, horizontal track. If the system is released from rest in the position shown, determine the velocities of Aand B as B passes directly under A. **(18)**

(b) Arm AB as shown in Fig. Q. 4(b) has a constant angular velocity of 16 rad/s counterclockwise. At the instant when $\theta = 90^\circ$, determine the acceleration **(20)**

(i) of collar D (ii) of the midpoint of bar BD.

SECTION – B

There are **FOUR** questions in this section. Answer any **THREE**.

Symbols indicate their usual meaning. Assume any missing data.

5. (a) A 100 kg weight is attached to a small pulley which may roll on the cable *ABC*, as shown in the Fig. for Q. No. 5(a). The pulley and the weight are held in the equilibrium position by a second cable *DE* which is parallel to *BC*. Determine the tension (i) in cable *ABC* and (ii) in cable *DE*. Neglect the radius and weight of the pulley and weight of the cable. **(17)**

(b) A 3-m pole is supported by a frictionless pin or hinge at *A* and by the cable *CD* and *CE*, as shown in Fig. for Q. No.5(b). Knowing that the line of action of the 5-kN force forms an angle $\Phi = 30^\circ$ with the vertical *xy* plane, determine (i) the tension in cables *CD* and *CE*, and (ii) the reaction at *A*. **(18)**

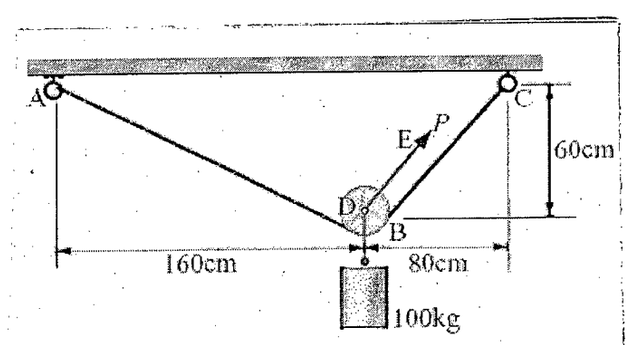

Fig. for Q. No. ~~4(a)~~ 5(a)

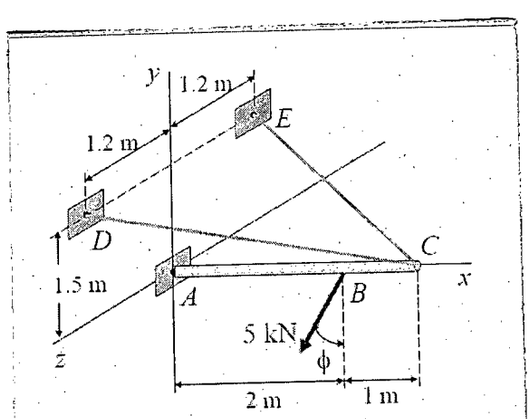

Fig. for Q. No. ~~4(b)~~ 5(b)

ME 141/MME

6. (a) The structure shown in Fig. for Q. No. 6(a) is subjected to a wind loading that exerts horizontal forces of 300 lb on joints *B* and *C* of one of the side supporting trusses. Determine the force in members *BC, CD, DB,* and *DE* of the truss and state whether the members are in tension or compression. **(18)**

(b) Rod *AD* supports a vertical load P and is attached to collars *B* and *C*, which may slide freely on the rods, as shown in the Fig. for Q. No. 6(b). Knowing that the wire attached at *D* forms an angle $\alpha = 30^\circ$ with the vertical, determine (i) the tension in the wire, (ii) the reactions at *B* and *C*. **(17)**

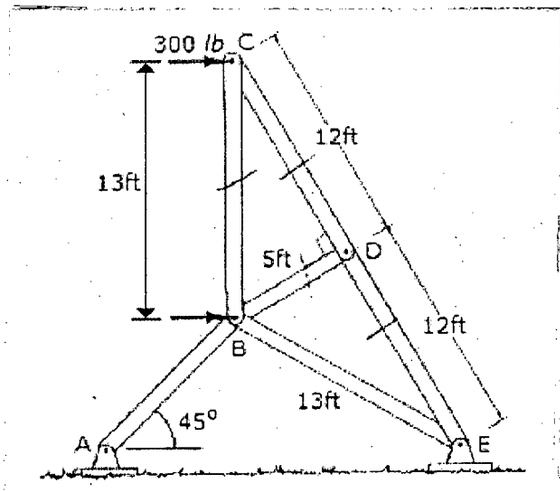

Fig. for Q. No. ~~7(a)~~ 6(a)

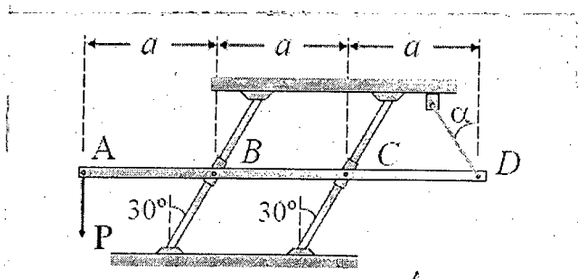

Fig. for Q. No. ~~7(b)~~ 6 6(b)

7. (a) Locate the centroid $(\bar{x}, \bar{y})$ of the composite area shown in Fig. for Q. No. 7(a). **(17)**

(b) Block *1* of weight W_1 = 1290 N rests on a horizontal surface and supports another block (block 2) of weight W_2 = 570 N on the top of it as shown in Fig. for Q. No. 7(b). Block 2 is attached to a vertical wall by an inclined string *AB*. Find the force ***P*** applied to block *1* that will cause the slipping to impend. **(18)**

Assume the coefficient of static friction between blocks *1* and *2* = 0.25 and that between block *1* and horizontal surface = 0.30.

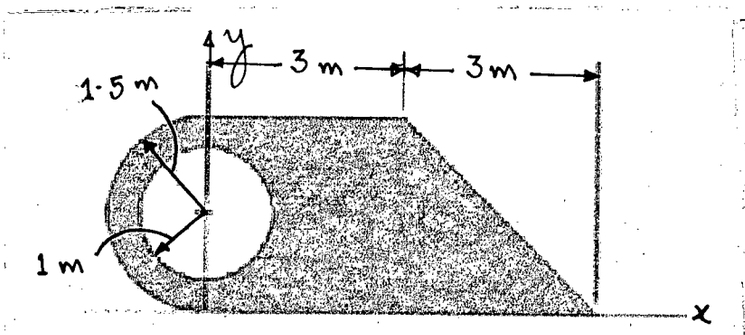

Fig. for Q. No. ~~7(a)~~ 7(a)

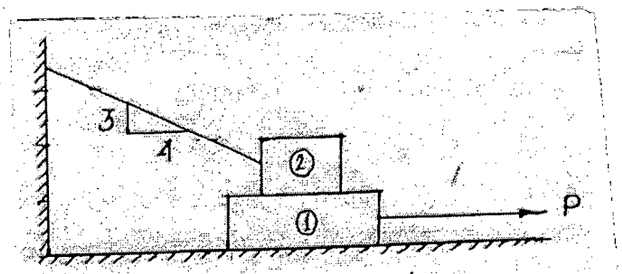

Fig. for Q. No. ~~7(b)~~ 7(b)

ME 141/MME

8. (a) Find the moment of inertia of the shaded area shown in Fig. for Q. No. 8(a) about the vertical and horizontal centroidal axes. The width of the hole is 200 mm. **(17)**

(b) Determine, by direct integration, the moments of inertia of the shaded area (as shown in Fig. for Q. No. 8(b)) with respect to the x and y axes. **(18)**

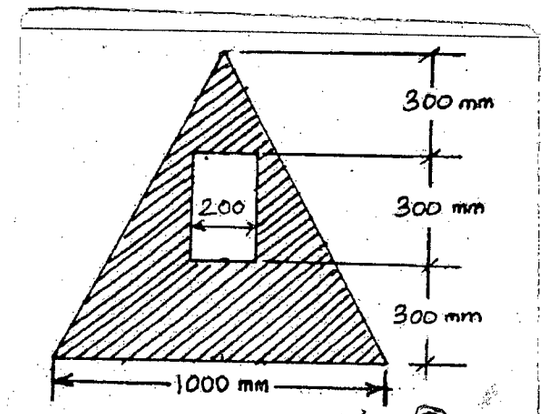

Fig. for Q. No. 8(a) 8

8(a)

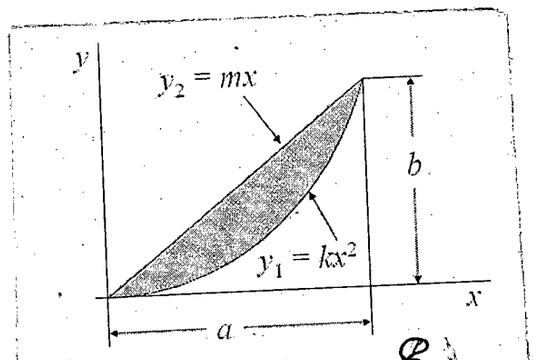

Fig. for Q. No. 8(b) 8

8(b)

ME 141 (MME)

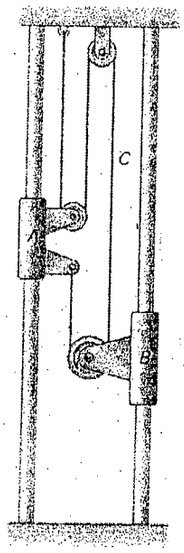

Fig. for Q.1 (a)

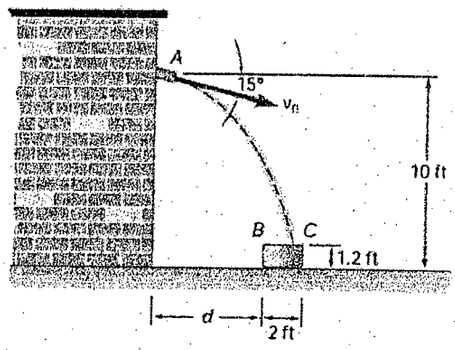

Fig. for Q.1 (b)

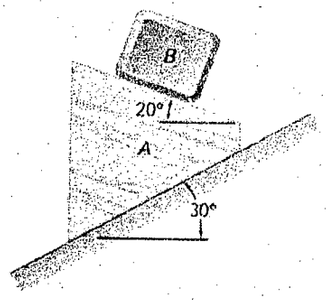

Fig. for Q.2 (a)

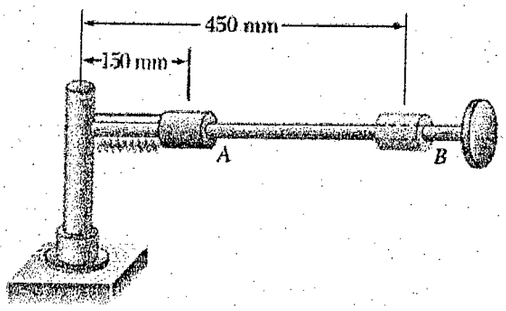

Fig. for Q.2 (b)

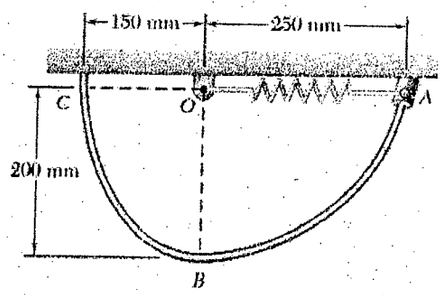

Fig. for Q.3 (a)

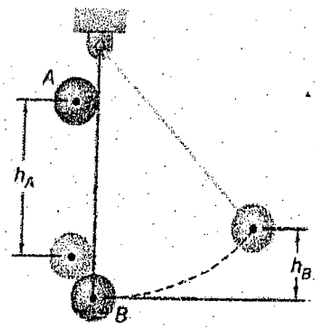

Fig. for Q.3 (b)

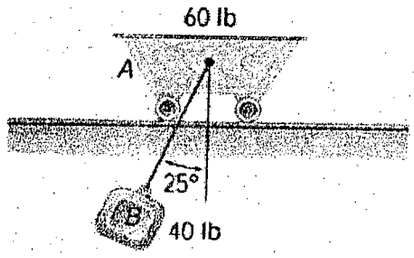

Fig. for Q.4 (a)

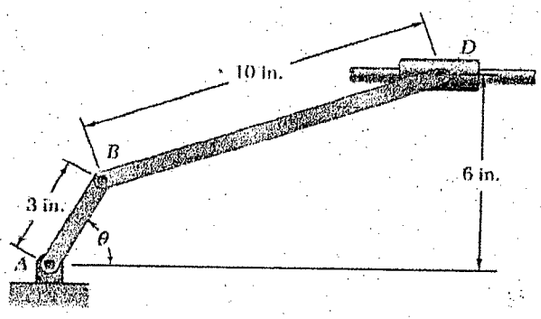

Fig. for Q.4 (b)

L-1/T-2/MME **Date : 06/07/2015**

BANGLADESH UNIVERSITY OF ENGINEERING AND TECHNOLOGY, DHAKA

L-1/T-2 B. Sc. Engineering Examinations 2013-2014

Sub : **PHY 157** (Properties of Matter, Electricity and Magnetism and Modern Physics)

Full Marks: 210 Time : 3 Hours

USE SEPARATE SCRIPTS FOR EACH SECTION

The figures in the margin indicate full marks.

SECTION – A

There are **FOUR** questions in this section. Answer any **THREE**.

1. (a) Define Poisson's ratio of a material. Derive a relation connecting Poisson's ratio (σ), Bulk modulus (K) and modulus of rigidity (η) of a material. Show that the limiting values of Poisson's ratio are –1 and 0.5. **(25)**

   (b) A wire of length 20 cm and diameter 0.24 cm is clamped from a rigid support and a load of 500 N is applied at the free end of the wire. If the increase in length is 6 cm and the decrease in diameter is 0.06 cm, what will be the Poisson's ratio of the material of the wire? Find out the Young's modulus of the material. (The modulus of rigidity is 3.26×10^{10} N/m^2) **(10)**

2. (a) Derive Poiseuille's equation for the coefficient of viscosity of a liquid. Explain the corrections of Poiseuille's equation. **(25)**

   (b) A liquid is flowing through a horizontal capillary tube of diameter 0.2 cm and length 10 cm, under the pressure 5 Pa. Find out the rate of flow of the liquid. (Coefficient of viscosity of the liquid is 0.0024 N-s/m^2) **(10)**

3. (a) Prove that the surface energy per unit area is numerically equal to the surface tension of a liquid. **(5)**

   (b) Deduce the formula of surface tension of water by capillary rise method. **(25)**

   (c) A capillary tube with the radius of the bore 1.2 mm is dipped vertically into a liquid of density 0.96 gm/cm^3. The liquid forms an angle of contact 15° due to the 3.6 cm rise through the tube. Find out the surface tension of the liquid. **(5)**

4. (a) State and explain Gauss's law in electrostatics. Discuss the nature of electric flux Φ_E and the magnetic flux Φ_B. **(10)**

   (b) Apply Gauss's law to calculate the electric field (i) at a distance r in front of a sheet of surface charge density (σ) and (ii) for points a short distance above the surface of a charged conductor of surface charge density σ. **(15)**

Contd P/2

PHY 157/MME

Contd... Q. No. 4

(c) What is an electric dipole? Discuss what happens when an electric dipole is placed in turn in a dc electric field E, and an ac electric field $E = E_0 \sin wt (w = 2\pi f)$. An electric dipole consists of two opposite charges of magnitude $q = 1.0 \times 10^{-6}$ coulomb separated by d = 2.0 cm. The dipole is placed in an external field $E = 1.0 \times 10^5$ N/coul. Calculate the maximum torque exerted by the field on the dipole. **(10)**

SECTION – B

There are **FOUR** questions in this section. Answer any **THREE**.

5. (a) Discuss different types of magnetic materials. Classify the 3d-transition metal elements Cr, Mn, Fe, Co, and Ni based on their magnetic properties. **(10)**

(b) Discuss Hall effect. Define Hall voltage and Hall electric field. A current i is set up in a copper strip **(15)**

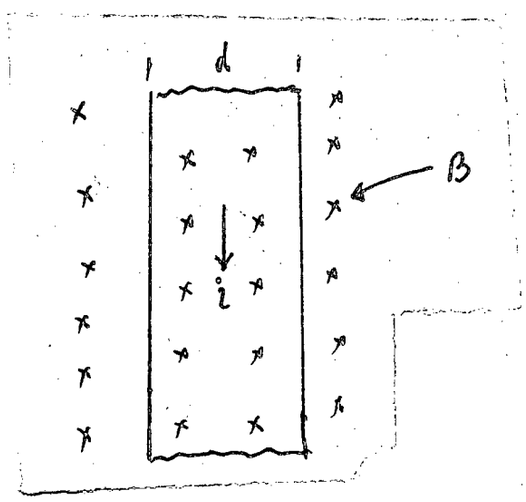

Fig.

placed in a magnetic field of magnetic induction B.

Show that the Hall field produced in the strip is $\vec{E}_H = \frac{\vec{j}}{ne} B$ and hence the number of carriers per unit volume is $n = \frac{jB}{eE_H}$. All parameters have their usual meaning.

(c) A copper strip 2.0 cm wide and 1.00 mm thick is placed in a magnetic field with B = 1.5 Webers/m^2. If a current of 200 amp is set up in the strip, what Hall potential difference appears across the strip? **(10)**

6. (a) Distinguish metal, semiconductor and insulator. Define current and current density and resistivity from atomic point of view. **(10)**

Contd P/3

PHY 157/MME

Contd... Q. No. 6

(b) Derive an expression for electron drift velocity in terms of current density and the number of conduction electrons in a metallic conductor. **(15)**

(c) Draw current versus voltage graphs for an Ohmic conductor, a semiconductor, and a Western Electric 1-B thermistor. Discuss the large negative temperature coefficient of the material. **(10)**

7. (a) State the basic postulates of special Theory of Relativity. **(7)**

(b) Deduce the formula for the relativistic variation of mass with velocity and hence show that the mass of a body becomes infinite when it moves with the velocity of light. What do you understand by this result? **(20)**

(c) Calculate the kinetic energy of an electron with a velocity of 0.98c in the laboratory system. **(8)**

8. (a) Define fission and fusion reaction. **(7)**

(b) Describe the working principle and various components of a Nuclear Reactor with schematic diagram. **(18)**

(c) The life time of the Isotope ^{238}U is 6.0×10^{9} yrs., while that of ^{235}U is 1.0×10^{9} yrs. Given that there is presently 140 times as much ^{238}U as ^{235}U and assuming that when earth was formed these isotopes were equally abundant, estimate earth's age. **(10)**

L-1/T-2/MME **Date : 01/08/2015**

BANGLADESH UNIVERSITY OF ENGINEERING AND TECHNOLOGY, DHAKA

L-1/T-2 B. Sc. Engineering Examinations 2013-2014

Sub : **MATH 173** (Vector analysis and Matrices)

Full Marks: 210 Time: 3 Hours

The figures in the margin indicate full marks.

USE SEPARATE SCRIPTS FOR EACH SECTION

SECTION-A

There are **FOUR** questions in this section. Answer any **THREE**.

1. (a) Show that four points whose position vectors are $3\underline{i} - 2\underline{j} + 4\underline{k}$, $6\underline{i} + 3\underline{j} + \underline{k}$, $5\underline{i} + 7\underline{j} + 3\underline{k}$, and $2\underline{i} + 2\underline{j} + 6\underline{k}$ are co-planar. (11)

(b) Prove that $[\underline{a}\ \underline{b}\ \underline{c}]^2 = \begin{bmatrix} \underline{a}\cdot\underline{a} & \underline{a}\cdot\underline{b} & \underline{a}\cdot\underline{c} \\ \underline{b}\cdot\underline{a} & \underline{b}\cdot\underline{b} & \underline{b}\cdot\underline{c} \\ \underline{c}\cdot\underline{a} & \underline{c}\cdot\underline{b} & \underline{c}\cdot\underline{c} \end{bmatrix}$ (12)

(c) Find an equation for the plane determined by the points P (2, -1, 1), Q ((3, 2, -1) and R (-1, 3, 2). (12)

2. (a) Find the directional derivative of F^2 where $\underline{F} = xy^2\underline{i} + zy^2\underline{j} + xz^2\underline{k}$, at the point (2, 0, 3) in the direction of the outward normal to the sphere $x^2 + y^2 + z^2 = 14$ at the point (3, 2, 1). (11)

(b) Find the equation of the tangent plane and normal line to the surface xyz = 4 at the point (1, 2, 2). (12)

(c) Show that if $(xyz)^b\ x^a\underline{i} + y^a\underline{j} + z^a\underline{k})$ is irrolational vector, then either b = 0 or a = -1. (12)

3. (a) If $\underline{F} = y\underline{i} - x\underline{j}$, evaluate $\int_C \underline{F}.d\underline{r}$ from (0, 0) to (1, 1) along the following curve (12)

(i) the parabola $y = x^2$.

(ii) the straight line from (0, 0) to (1, 0) and then to (1, 1).

(iii) the straight line joining (0, 0)m to (1, 1).

(b) Find the work done in moving a particle once around a circle C in the xy-plane, if the circle has the centre at origin and radius 3 and when the force field is given by (10)

$\underline{F} = (2x - y + z)\underline{i} + (x + y - z^2)\underline{j} + (3x - 2y + 4z)\underline{k}$.

(c) State and prove Green's theorem in the plane. (13)

4. (a) Show that $\iint_S \underline{F}\cdot\underline{n}\ dS = \frac{3}{2}$ where (12)

$\underline{F} = 4xz\underline{i} - y^2\underline{j} + yz\underline{k}$ and S is the surface of the cube bounded by the planes, x = 0, x = 1, y = 0, y = 1, z = 0, z = 1.

(b) If $\underline{F} = (2x^2 - 3z)\underline{i} - 2xy\underline{j} - 4x\underline{k}$, then evaluate $\iiint_V \underline{\nabla}\cdot\underline{F}\ dV$, where V is the region bounded by x = 0, y = 0, z = 0, 2x + 2y + z = 4. (12)

(c) Verify Stokes theorem for $\underline{F} = (x^2 + y^2)\underline{i} - 2xy\underline{j}$ taken round the rectangle bounded by $x = \pm a$, $y = 0$, $y = b$. (11)

Contd P/2

MATH 173

SECTION-B

There are **FOUR** questions in this section. Answer any **THREE**.

5. (a) Prove that the product of two matrices (10)

$$\begin{bmatrix} \cos^2\theta & \cos\theta\sin\theta \\ \cos\theta\sin\theta & \sin^2\theta \end{bmatrix} \quad and \quad \begin{bmatrix} \cos^2\phi & \cos\theta\sin\phi \\ \cos\phi\sin\phi & \sin^2\phi \end{bmatrix}$$

is zero when θ and ϕ differ by an odd multiple of $\frac{\pi}{2}$

(b) Find the condition that should be satisfied by k such that the matrix $A = \begin{bmatrix} 1 & 3 & 4 \\ 3 & k & 6 \\ -1 & 5 & 1 \end{bmatrix}$

has an inverse and find A^{-1} for k = 1. (12)

(c) Find the rank of the matrix $A = \begin{bmatrix} 2 & 4 & 3 & -2 \\ -3 & -2 & -1 & 4 \\ 6 & -1 & 7 & 2 \end{bmatrix}$ reducing it to canonical form. (13)

6. (a) Compute the inverse of the following matrix by using elementary transformations

$$A = \begin{bmatrix} 2 & -6 & -2 & -3 \\ 5 & -13 & -4 & -7 \\ -1 & 4 & 1 & 2 \\ 0 & 1 & 0 & 1 \end{bmatrix}$$ (18)

(b) Test the consistency of the following system of equations and if found consistent, solve it using matrix: (17)

5x + 3y + 7z = 4

3x + 26y + 2z = 9

7x + 2y + 10z = 5

7. (a) Find two nonsingular matrices P and Q such that PAQ is in normal form, where (17)

$$A = \begin{bmatrix} 2 & 1 & -3 & -6 \\ 3 & -3 & 1 & 2 \\ 1 & 1 & 1 & 2 \end{bmatrix}$$

(b) Reduce the quadratic from $6x_1^2 + 3x_2^2 + 3x_3^2 - 4x_1x_2 - 2x_2x_3 + 4x_3x_1$ to canonical form and write down the corresponding transformations. Also find the rank, index and signature. (18)

8. (a) Show that the matrix $A = \begin{bmatrix} 1 & -2 & 2 \\ 1 & 1 & 3 \\ 0 & -2 & 2 \end{bmatrix}$ satisfies its characteristic equation and hence find A^{-1}. (15)

(b) Find the eigenvalues and eigenvectors of the matrix $A = \begin{bmatrix} 2 & -1 & 1 \\ -1 & 2 & -1 \\ 1 & -1 & 2 \end{bmatrix}$. Also find the characteristic space of A. (20)

L-1/T-2/MME **Date : 05/08/2015**

BANGLADESH UNIVERSITY OF ENGINEERING AND TECHNOLOGY, DHAKA

L-1/T-2 B. Sc. Engineering Examinations 2013-2014

Sub : **CHEM 121** (Organic Chemistry)

Full Marks: 210 Time: 3 Hours

The figures in the margin indicate full marks.

USE SEPARATE SCRIPTS FOR EACH SECTION

SECTION-A

There are **FOUR** questions in this section. Answer any **THREE**.

1. (a) Define the term "heterocyclic compounds" with examples. Distinguish between aliphatic and aromatic heterocycles. (3+4=7)

   (b) Describe the general method of synthesis of pyrrole, furan and thiophene and also give a commercial method of synthesis for each one of them. (4+9=13)

   (c) How would you carry out the following conversions: (4×3=12)

   (i) Maleicanhydride from pyrrole

   (ii) Pyridine from pyrrole

   (iii) 2-Iodo thiophene from thiophene

   (iv) Tetrahydrothiophene from thiophene

   (d) Mention some uses of pyrrole (3)

2. (a) What is conformation? Draw Newman projections for all possible conformations of butane. Show the more and the less stable conformers of methyl cyclohexane. (11)

   (b) Give the synthesis of but-2-ene with mechanism using the follow reactions.

   (i) Dehydration of alcohol

   (ii) Wittig reaction (12)

   (c) Write the structures and name of the products expected from the reaction of 2-mehyl-2-butene with: (12)

   (i) $KMnO_4(aq)$, OH^-, cold

   (ii) O_3 ; H_2O_2, H^+

   (iii) $ArCO_3H$ and (iv) Br_2, H_2O

3. (a) Give the structure for each of the following compounds:

   (i) Allene (ii) Butenyne (iii) 3-Hexen-1-yne

   (iv) (Z)-2-Bomo-1-chloro-2-fluoro-1-iodoethene.

   (v) (E)-3-Methyl-2-Hexene (10)

   (b) Write down the structure of the isomeric hexynes and name them by the IUPAC system. (8)

   (c) Give the preparation of But-2-yne and Hex-2-yne from acetylene. (8)

   (d) How do you prepare vinyl acetate, isoprene, vinyl chloride and acetaldehyde from acetylene (any three). (9)

Contd P/2

CHEM 121

4. (a) Describe a mechanism for the SN^2 reaction showing transition state, configuration and order of reaction. (12)

(b) What are the factors affecting the rates of SN^1 and SN^2 reactions (11)

(c) Complete the following equations showing only the major and minor organic products, and predict which reaction mechanism is the mot likely:

(i) $CH_3CH_2Br + C_2H_5ONa \xrightarrow[55^oC]{C_2H_5OH}$

(ii) $(CH_3)_3\ CCl + 2H_2O \rightarrow$

(iii) $(CH_3CH_2)_3CBr + CH_3OH \rightarrow$ (12)

SECTION-B

There are **FOUR** questions in this section. Answer any **THREE**.

5. (a) What is Huckel Rule? Explain why pyridine, pyrrole are aromatic whereas cycloheptatriene is not. (2+5=7)

(b) Benzene undergoes electrophilic substitution reaction but alkenes undergo addition reaction- Explain with suitable examples. (8)

(c) Give the mechanisms of chlorination of toluene in sunlight and in presence of $FeCl_3$. (5+5=10)

(d) How will you synthesis the following:

(i) Benzyl alcohol from benzene

(ii) m-nitro aniline from benzene (5+5)

6. (a) Give the reactions with the main product names when nitro benzene is reduced under different pH condition. (9)

(b) Give the mechanism of nitration and alkylation of methyl benzene. (5+5)

(c) Give the method of synthesis of picric acid and phenol from benzene. (5+5)

(d) Give three important reactions of benzene diazonium chloride. (6)

7. (a) Write down three methods for the synthesis of phenol. (9)

(b) How can you synthesis 3-dichlorobenzene from benzene? Give the reactions involved. (8)

(c) Mention the reactions that have been postulated for the biosynthetic conversion of amino acids into alkaloids. (8)

(d) Show the pathway for the biosynthesis of the alkaloid harmine from tryptophen. State some of the functions of alkaloids. (5+5)

CHEM 121

8. (a) Give the Fischer-Indole synthesis of indole. (7)

(b) What happens when indole is subjected to mild and catalytic reduction? (6)

(c) Write with reactions what happens when furfural is treated with (6)

(i) hydrogen in presence of copper chromite.

(ii) Oxygen and sodium chlorate.

(d) State with reactions what happens when (4×4=16)

(i) Pyridine is treated with $CH_3\text{-}\overset{\overset{\displaystyle O}{||}}{C}\text{-}OOH$.

(ii) Pyridine is treated with C_6H_5Li at 100°C.

(iii) Quinoline is treated with HNO_3 and fuming H_2SO_4.

(iv) Isoquinoline is treated with hydrogen in presence of platinum catalyst.

L-1/T-2/MME **Date : 09/08/2015**

BANGLADESH UNIVERSITY OF ENGINEERING AND TECHNOLOGY, DHAKA

L-1/T-2 B. Sc. Engineering Examinations 2013-2014

Sub : **HUM 101** (English)

Full Marks: 210 Time : 3 Hours

USE SEPARATE SCRIPTS FOR EACH SECTION

The figures in the margin indicate full marks.

SECTION – A

There are **FOUR** questions in this section. Answer any **THREE** questions, including **Q. No. 1** as compulsory.

1. (a) Explain with reference to the context any two of the following: **(15)**

   (i) "We want to be rescued; and of course we shall be rescued."

   (ii) "Do you know a great load is gone from me today? I had the blood of a man on my hands all these years."

   (iii) "At last I came to the conclusion that I could never find the one, complete and satisfying book I sought ... ...".

   (b) Answer any one of the following: **(15)**

   (i) Do you think that the killing of the elephant in "Shooting an Elephant" is justified? Give reasons for your answer.

   (ii) What is the importance of the study of philosophy? Discuss in the light of "The Use of Philosophy".

   (c) Answer any three of the following: **(15)**

   (i) How did the astrologer attract the passers by?

   (ii) "Absolute power corrupts absolutely." Comment on it in the light of the story "Shooting an Elephant".

   (iii) Are you sympathetic or not to the astrologer in "An Astrologer's Day"?

   (iv) What is the significance of fire in "Fire on the Mountain"?

   (v) Why did the books brought by the scholars for the king prove to be useless?

2. (a) Recast and correct any ten of the following sentences: **(15)**

   (i) Neither the truck, the station wagon, nor the sports car will be there.

   (ii) His thoughtlessness and discourtesy annoys me.

   (iii) Abir was studying Mathematics, Botany, and English.

   (iv) I shall accompany the winners, whomever they may be.

   (v) When he was five years old, the boy's father died.

   (vi) The fisherman put the boat up under the dock.

   (vii) Maliha told me what to do with a smile.

   (viii) Rini looks like she is a lady in red.

Contd P/2

HUM 101/MME

Contd... Q. No. 2(a)

(ix) The jury are giving their verdict now.

(x) If and when the cabinet acts, I shall respond accordingly.

(xi) The teacher is going to repeat the lecture for a second time.

(xii) In regards to your problem, Sadia is offering a suggestion.

(b) Give the meaning of and make sentences with any ten of the following words: **(15)**

Surfeit, tyro, undercut, tamper, vestige, waxy, get across, take after, look up to, put up with, cataclysm, Enervate.

3. Amplify any one of the following ideas: **(30)**

(a) Truth is hard that never deceives.

(b) Slow and steady wins the race.

4. Write a precis of the following passage with a suitable title: **(30)**

The world is like a looking glass; if you smile, it smiles; if you frown, it frowns back; if you look through a real glass, all seems red and rosy; if through a blue, all blue; if through a smoked one, all dull and dirty. Always try then to look at the bright side of things; almost everything in the world has a bright side. There are some persons whose smile, the sound of whose voice, whose very presence, seem like a ray of sunshine and brighten a whole room. Greet everybody with a bright smile, kind words and a pleasant welcome. It is not enough to love those who are near and dear to us. We must show that love.

SECTION – B

There are **FOUR** questions in this section. Answer **Q. No. 5** and any **TWO** from the rest.

5. Read the passage carefully and answer the questions that follow: **(45)**

The mistaken belief that democracy means the rule of the majority is exceedingly widespread, and it has vitiated a great deal that has been said about the subject. On the one hand, champions of majority have seen themselves as champions of democracy; while, on the other, critics of majority rule have supposed themselves to be critics of democracy. Where the left envisages and recommends the rule of a permanent majority of workers, the right visualises and dreads the rule of a permanent majority of the ignorant. Both think they are talking about democracy; in truth neither of them is.

Democracy is a political doctrine. Marx may have been correct in everything he said about the identify of material interest among the members of the proletariat; but politics

HUM 101/MME

Contd... Q. No. 5

has to do with opinions as well as with material interests. In opinion, a man sometimes thinks with the bulk of his fellows and sometimes with the few. Whatever a man may be as an economic animal, as a thinking animal he is sometimes a member of the majority and sometimes a member of the minority. In opinion there is no permanent majority.

It seems to me that it is not enough to define 'democracy' by words alone: it must be defined by its methods. And it is certainly one of the methods of democracy to accept, as final, the decision of the majority on the various issues which arise. But this is not the whole method of democracy. Democracy is being confused with majority rule as a result of concentrating on what is only a part of these methods. What we call the coming of democracy has been the progressive extension to every person of the right to choose a representative in parliament. The very name of parliament— from the old French, parle-le-ment, or "speak the mind"— affords the best due to its nature. Parliamentary government means legislation by the whole House and the method of parliament is the method of debate and dialogue. Spokesmen of the minority, or minorities, participate in this dialogue just as freely as spokesmen of the majority. The vote comes at the end; but what comes at the end is not necessarily what lies at the heart of the system. The debate is more important than the division. For it is the debate that makes it possible for opinions to be formulated and exchanged. The debate enables representative of different points of view to persuade one another of the merits of their case. The debate affords a constant possibility of adjustment and compromise. In this process, the minority participates on equal terms.

It is an essential characteristic of democracy that the decision of the majority shall be accepted at those times when decisions are taken; and it is a no less important characteristic of democracy that everybody has a share in the dialogue which precedes the taking of decisions.

Question:

(a) What differing views of democracy are expressed in the passage?

(b) What, according to the author, is the correct notion of democracy?

(c) What are the benefits of debate?

(d) Do you agree with the author about his conception of democracy? Give reasons for your answer.

(e) What attitude to the topic does the author reveal? How do you identify it?

6. (a) What is a tender? How do you differentiate a tender from a quotation? **(10)**

(b) Write a letter to an aggrieved customer who has received a dilapidated consignment. **(10)**

(c) Write phonetic transcription of any five of the following: **(10)**

student, building, fabulous, plough, natural, angel.

Contd P/4

HUM 101/MME

7. (a) What is a formal report? What are the types of a formal report? **(5)**

(b) Write a short essay on any one of the following: **(15)**

(i) Importance of being punctual

(ii) Formation: its uses and abuses

(iii) Waste Management

(c) Write dialogue between two anxious citizens about the law and order situation of the country. **(10)**

8. (a) Transform the following sentences as directed (any five). **(10)**

(i) Tell me the location of the clinic. (Complex)

(ii) He insisted that I should accompany him. (Simple)

(iii) Nobody loves me as much as my mother. (Simple)

(iv) They let us go. (Passive)

(v) I am glad to hear of your success. (Complex)

(vi) To avoid punishment he ran away. (Compound)

(b) What are the features of a good business letter? **(5)**

(c) Write short notes on any three of the following: **(15)**

(i) Front Matters of a report

(ii) Index

(iii) Context and Feedback

(iv) Unity in a Paragraph

(v) Formal and informal letter.