STUDY OF HEAT TRANSFER IN AN AGITATED JACKETED VESSEL

BY

M. ROKON-UD- DOWLA

A Thesis

Submitted to the Department of Chemical Engineering in partial fulfilment of the requirements for the Degree of Master of Science in Engineering (Chemical).

বাংলাদেশ প্রকৌশল বিশ্ববিদ্যালয়
নং 68115
তাং 17-6-87
লাইব্রেরী, ঢাকা

BANGLADESH UNIVERSITY OF ENGINEERING & TECHNOLOGY

DHAKA, BANGLADESH

APRIL 1987.

#68115#

660.28427
1987
ROK

BANGLADESH UNIVERSITY OF ENGINEERING AND TECHNOLOGY, DHAKA

DEPARTMENT OF CHEMICAL ENGINEERING

CERTIFICATION OF THESIS WORK

We, the undersigned, certify that MR.M. ROKON-UD-DOWLA candidate for the degree of MASTER OF SCIENCE IN ENGINEERING(CHEMICAL) has presented his thesis on the subject STUDY OF HEAT TRANSFER IN AN AGITATED JACKETED VESSEL, that the thesis is acceptable in form and content, and that the student demonstrated a satisfactory knowledge of the field covered by this thesis in an oral examination held on 11th April, 1987.

K. Ikhtyar Omar

(Dr. K. Ikhtyar Omar)
Professor
Dept. of Chemical Engineering
BUET, Dhaka.

Chairman, Examination Committee

(Dr. M. Nurul Islam)
Professor
Dept. of Chemical Engineering
BUET, Dhaka.

Member, Examination Committee.

(Dr. Iqbal Mahmud)
Professor & Head
Dept. of Chemical Engineering
BUET, Dhaka.

Member, Examination Committee

(Dr. A.K.M.A. Quader)
Professor
Dept. of Chemical Engineering
BUET, Dhaka.

Member, Examination Committee.

Mr.M. Badiuzzaman
Senior General Manager
R.P.D. Bangladesh Chemical
Industries Corporation, Dhaka.

External Member, Examination Committee.

ACKNOWLEDGEMENTS

The author acknowledges with gratitude the constant guidance and helpful suggestions of Prof. K. Ikhtyar Omar and Prof. M. Nurul Islam during the present work. Working under their supervision was pleasant and rewarding.

The author also acknowledges Prof. A.K.M.A. Quader for his advice and thoughtful suggestions from time to time and his keen interest in the work.

The author takes this opportunity to convey thanks to Prof. Khaliqur Rahman for kindly providing the necessary laboratory facilities for the work.

The help of the laboratory technicians of the department of Chemical Engineering during the experimental part of the work is noted with appreciation. Mr. Md. Hossain Ali deserved unreserved thanks for typing the thesis.

ABSTRACT

Studies on the rate of heat transfer were carried out in an agitated jacketed vessel of 0.4 meter inside diameter and equipped with an anchor agitator. Eleven different liquids were used in the present investigation. These were water, sugar solutions (10, 15 and 20 percent), Skimmed milk, non skimmed milk, soyabean oil and different soyabean oil-water emulsions. (2.25, 3.5, 15 and 25 percent). These liquids were heated by steam at different pressures and cooled by water. The steam pressures were 41.37 kPa (guage), 68.95 kPa (guage) and 137.89 kPa (guage). The agitator speeds were varied between 45 r.p.m. and 75 r.p.m. Heat transfer coefficients were calculated for each experimental conditions and were compared with figures from available literature. The data obtained in the present work were correlated with the Sieder Tate type equation:

$$Nu = a\ (Re)^{b}\ (Pr)^{c}\ \left(\frac{\mu_w}{\mu}\right)^{d}$$

The correlating equation for the heating runs for the sugar solutions is

$$Nu = 0.0446\ (Re)^{0.6578}\ (Pr)^{\frac{1}{3}}\ \left(\frac{\mu_w}{\mu}\right)^{-0.14}$$

For oil-water emulsions the correlating equation for the heating run is

$$Nu = 0.0439\ (Re)^{0.6795}\ (Pr)^{\frac{1}{3}}\ \left(\frac{\mu_w}{\mu}\right)^{-0.14}$$

and for all the heating data except oil, the correlating equation is

$$Nu = 0.0496 \ (Re)^{0.6632} \ (Pr)^{\frac{1}{3}} \ \left(\frac{\mu_w}{\mu}\right)^{-0.14}$$

Soyabean oil has a high prandtl number compared to other liquids used in this experiment, so data for oil was not included in the general correlation.

The values of 'c' and 'd' have been selected by litu-rature survey and the values of 'a' and 'b' by actual experiment. The values of 'a' and 'b' were compared with the available liturature and it was found to be comparable.

The values of Nusselt number calculated according to the above equations shows a standard deviation of 11 percent, 18 percent and 20 percent respectively, for sugar solutions, oil-water emulsions, and for all the heating data (except oil).

CONTENTS

		Page
Abstract		i
Acknowledgement		iii
Contents		iv
List of Tables		vii
List of Figures		viii
Chapter-1	INTRODUCTION	1
1.1	Equipment Selection	2
1.1.1	Agitators	3
1.1.2	Factors affecting agitator selection	4
1.1.3	Heat transfer studies	5
1.2	Significance of the Present Work	5
Chapter-2	LITURATURE REVIEW	7
2.1	Heat Transfer to Newtonian Fluids	7
2.2	Experimental Studies	8
2.2.1	Heat transfer in agitated vessels - non proximity agitators	9
2.2.2	Heat transfer in agitated vessels - proximity agitators.	18
2.3	Theoretical Considerations	22
Chapter-3	PROGRAMME OF RESEARCH	35
3.1	Outline of Approach	35
3.2	Objectives of Present Investigation	36

Chapter - 4	EXPERIMENTAL	37
4.1	Experimental flow diagram	37
4.2	Apparatus and Instruments	38
4.3	Setting and positioning of Thermocouple in the surface of the wall and measurement of Temperature	39
4.4	Measurement of Physical properties	40
4.5	Experimental Procedure	41
Chapter - 5	RESULTS	44
Chapter - 6	DISCUSSION	57
Chapter - 7	CONCLUSIONS AND SUGGESTIONS	64
7.1	Conclusions	64
7.2	Suggestions for future work	65
Chapter - 8	NOMENCLATURE	66
Chapter - 9	REFERENCES	70

APPENDIXES 75

A - Experimental data 75

B - Properties of fluids 84

C - Sample Calculation 93

D - Figure showing standard deviation 98
Nu expt. Vs. Nu calculated

E - Computer Programes 99

(a) Calculation of Results 99

(b) Regression analysis 101

LIST OF TABLES

TABLE	TITLE	PAGE
2.1	Correlations obtained by different authors	29
5.2	Results of Constants obtained by Regression analysis.	56

LIST OF FIGURES

Figures	Title	Page
1.1	Simple types of Impeller	3a
2.1	Resistances to heat transfer through a tank wall to a liquid being heated	22a
4.1	Experimental Set-up	37a
4.2	Jacketed Vessel	38a
4.3	Anchor Agitator	38b
5.1	Plot of Nusselt Number Vs Reynolds Number	56a
5.2	Plot of Heat transfer coefficient Vs impeller Speed	56b
5.3	Plot of Reynolds number Vs Heat transfer factor	56c
5.4	Plot of General Correlation	56d
5.5	Plot of final correlation of data of other authors	56e
App-D	Plot of Nusselt number(Calculated) Vs Nusselt number (experimental)	98

বাংলাদেশ প্রকৌশল বিশ্ববিদ্যালয়
নং 68115
17-6-87
তাং
লাইব্রেরী, ঢাকা

1.0 INTRODUCTION

Heat transfer in Jacketed Vessel is an operation of considerable importance and due to its adaptability for a variety of processes it is one of the most widely used pieces of equipment in chemical and allied industries. Such vessels are extensively used as mixers, aerators and reactors. The construction is very simple and avoids the risk of polluting the reactants with metal and easy cleaning. Therefore, it is common practice to rely upon the heat transfer surface provided by jacket alone inspite of its low area to volume of Vessel contents ratio.

For the purpose of chemical plant design, when making use of jacketed vessel, it is often necessary to estimate overall heat transfer coefficients, particularly if the batch processing times are to be predicted for some unfamiliar process or for the scaled-up version of a known process. It is, therefore, necessary that a reliable and accurate procedure should be available for design purposes. Unfortunately, heat transfer in an agitated vessels are complicated by many factors. The geometry of the system may vary widely, as is seen from the review of mixing equipment presented by Penny (1). A wide variety of impellers are available to promote good mixing and high rates of heat transfer. The most common types, illustrated in Figure (1.1), are paddles, turbines, propellers, and anchors. There are many others, for example helical ribbons, sigma-blade

mixers etc. The transfer of heat may be achieved either through the vessel wall or through coils immersed in the liquid. The rheological behaviour of the fluid may be complex. Most pure liquids will exhibit Newtonian behaviour, but the viscocity will vary with temperature. Suspensions, polymer solutions, paints, foodstuffs, oils etc. may be non-newtonian and the consistancy of the material will vary with both temperature and shear rate.Certain fluids may degrade under conditions of high shear rates or high temperature.

The factors mentioned above illustrate some of the difficulties which may be encountered in the study of heat transfer in agitated vessels due to a larger extent to the wide range of equipments which are available. However, not all combinations of impeller and heat transfer surface will be adequate for a particular heat transfer duty and the selection of appropriate equipment is an important first step in design procedure.

1.1 Equipment Selection

In many instances in which heat is transfered to or from a fluid in an agitated vessel, some considerations other than heat transfer influence the selection of equipment. For example, it may also be necessary to obtain good blending or disperson of materials in order to achieve desired reaction rates. Only a brief outline of some of the factors to be considered will be given here.

For a given material, two choices have to be made. It is necessary to select the appropriate type of agitator and a suitable heat transfer surface.

1.1.1 Agitators

Agitators can be classified in various ways, for example as high speed or low speed, proximity or non-proximity, etc. However, the most useful and main types of impeller which are illustrated in Figure (1.1) are described below:

PADDLES - Paddle impellers are usually flat-bladed impellers having a ratio of blade diameter to tank diameter, D_i/D_T, in the range of ⅓ to ⅔. At low rotational speeds the flow induced in the vessel is mainly tangential whilst at higher speeds a significant radial flow is produced.

TURBINES - A turbine impeller usually has six flat blades set on a central disc and the impeller diameter is about ⅓ of the vessel diameter. The rotational speed is usually high and this induces mainly radial flow from the impeller. It is possible to obtain a significant axial flow component from the turbine by the use of curved blades.

PROPELLERS - Propellers are usually the three-bladed marine-type impeller which operate at relatively high speeds and the impeller diameter is about ⅓ of the vessel diameter. This type of impeller produces axial flow predominantly.

FIGURE. 1·1

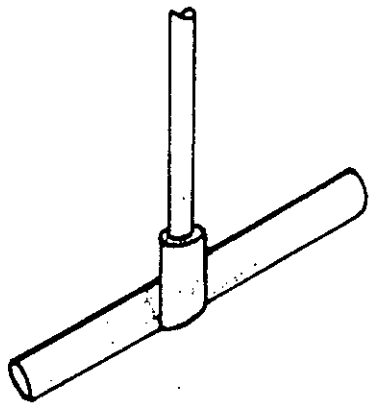

A: PADDLE.

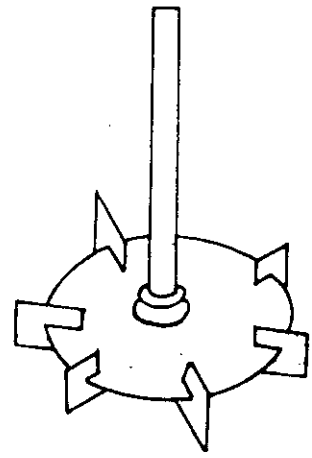

B: TURBINE.

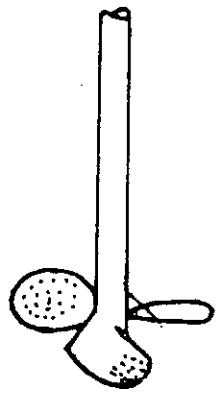

C: PROPELLER.

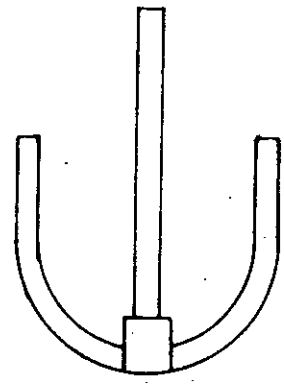

D: ANCHOR.

SIMPLE TYPES OF IMPELLER.

ANCHORS - For anchors the impeller diameter is close to the tank diameter giving only a small clearance between the blade and the vessel. The rotational speed is usually low and obviously this type of impeller promotes fluid motion close to the vessel wall.

1.1.2 Factors Affecting Agitator Selection

The main parameter affecting agitator selection for Newtonian materials is fluid consistancy. In general, large-diameter impellers operating at low speeds are good for blending and heat transfer with high viscocity fluids. Small impellers operating at high speed are useful for dispersion and heat transfer in low viscocity systems.

With the non-Newtonian materials, the problems are more complex. If the material is highly pseudoplastic, that is, the apparent viscocity falls with increasing shear rate, then small, high-speed agitators are likely to be ineffective because this type of impeller would tend to displace material only in the region of the impeller, where the shear rate is high and the consistancy of the material low, the material remote from the impeller being virtually undisturbed. With highly viscous materials the necessary power input for agitation would be very great. Moreover, many non-Newtonian materials are sensitive to shear and high-speed impellers could result in unacceptable degradation. Therefore, for viscous Newtonian and non-Newtonian fluids, large, slow-speed impellers such as

anchors are likely to be effective in promoting good heat transfer since these tend to displace fluid in the region of the heat transfer surface. In some cases the addition of surface scrappers becomes very beneficial because this can increase the rate of heat transfer and also prevent the build-up of scale or other deposits at the heat transfer surface.

1.1.3 Heat Transfer Surfaces

The most common types of heat transfer surfaces in agitated vessels are jackets, where the heat is transferred through the vessel wall, and single helical coils, which are placed inside the vessel. However, other arrangements are feasible, for example, combinations of jackets and coils, multiple concentric coils, vertical baffle coils, vertical plates, and so on.

1.2 Significance of the Present Work

Jacketed vessels are very common in the chemical process industries because of its adaptability and simplicity. The main advantages are (a) they are simple in construction and can be fabricated locally. (b) cleaning is relatively easy, and (c) chances of contamination of the product liquid to be heated or cooled is minimal. Proper design of these vessels needs sufficient reliable data, which are few. Especially, data on emulsion type of fluids are very few.

Industrialization in Bangladesh is growing rapidly. Food industry is one of the potential and developing areas where jacketed vessels are frequently required. Hence, it is felt that the study of heat transfer of the fluids chosen in a jacketed vessel will be useful in designing similar equipment for local industries.

2.0 LITURATURE REVIEW

The transfer of heat to or from a fluid in an agitated vessel is a common operation. Common types of heat-transfer surfaces are helical coils, jackets, and vertical tubes. The agitators which are commonly used are paddles, propellers, turbines and anchors. There have been several studies of heat transfer to Newtonian and non-Newtonian fluids since Chilton et al (2). Majority of these works dealt with the systems equipped with helical coils and jackets and agitated with paddles, propellers or turbines. Most investigators agree on the general correlation obtained, but despite the sucess of general correlations, the available data as obtained from given systems exhibited considerable variation, which appears mainly due to complex geometrical shape of the system. Therefore adequate information and reliable data for design or prediction of performance is limited. To date it also appears that data on emulsion type of fluids and also for anchor agitator are very limited. This chapter summarizes the investigations made in the past, attempting to show how the various studies differed.

2.1 Heat Transfer to Newtonian Fluids

The rate of heat transfer to an agitated liquid mass in a vessel is a function of the physical properties of the agitated liquid and the heating or cooling medium, the vessel geometry, and the degree of agitation.

Heat transfer may take place by radiation, conduction or convection, or a combination of all three. Radiation occurs when energy in the form of high frequency electromagnetic waves is emitted from a heat source. Conduction is the transfer of energy between vibrating molecules that remain in a fixed position relative to each other. Convection, both natural and forced, occurs between colliding molecules at different degrees of excitation as they change position and move throughout a liquid.

In a vessel containing an agitated liquid, heat transfer is brought about primarily through conduction and forced convection (3). The resistance or film theory conveniently describes this process. Before going to the theoretical considerations the experimental studies involving heat transfer to Newtonian fluids have been discussed in the following section.

2.2 Heat Transfer in Agitated Vessels

To facilitate the organization of this subject, the types of agitators are categorized as proximity when the blades sweep close to or scrape the vessel wall and nonproximity when the outer edge of the agitator blades rotate some distance from the wall. By far the greater proportion of the published investigations and the industrial applications are for the nonproximity types, viz., propellers, turbines, and paddles, which are ordinarily used for low to medium viscous (0.1 to 1000 m Pa.S) fluids. These smaller, generally higher speed agitators also facilitate heat transfer to the surfaces of coils immersed

in the vessel as well as in jacketed vessel walls. The proximity type can either be close clearance as in the anchor or a wall scraping design.

2.2.1 Nonproximity Agitators

The nonproximity agitators which are selected for heat transfer are the propeller, the various turbines, and the paddles, all of which provide a high circulation rate and allow a minimum of energy to be dessipated initially by shear forces in the vicinity of the impeller. Heat is transferred to either the vessel wall which is jacketed or to walls of an immersed tube coil. The term "jacketed" will be considered to include a variety of constructions such as coils or half-coils welded to the vessel wall and coils cast in the wall.

2.2.1.1 Heat transfer to jacketed vessel walls

In studies of agitated systems, the general correlation technique has been to use a Nusselt number, an impeller Reynolds number, a Prandtt number, and a viscosity ratio in the usual heat transfer relation:

$$Nu = K(Re)^a \ (Pr)^b \ (\mu_w/\mu)^c$$

Some workers have modified this equation to include certain characteristic dimension ratios of the agitation system (Table 2.1).

The results of the more extensive experimental investigations are outlined in Table (2.1). Except for scattered

early data (4,5), the work of Chilton et al. (2) was the first study to use the conventional groups for correlating heat transfer to jackets or coils. In some cases the temperatures at different point in the liquid varied by as much as $3^{o}C$. They used a variety of liquids, such as, water, kerosine, glycerol etc, and found values of h in the range of 0.11 to 11.36 $kw/m^2.^{o}K$ depending on the conditions used.

Cummings and West (6) extended the earlier work of Chilton et al. to a larger vessel and some different impellers. They obtained essentially the same correlations and also showed that their correlation for helical coil heat transfer was adequate to correlate the data of Rushton et al. (7) for vertical baffle-coils. With a few scattered data, Cummings and West also indicated that changing the direction of rotation of their pitched-blade turbine had no significant effect on the heat transfer coefficient. Data by Kraussold (8), from a vessel in which a paddle with a very high ratio of blade width to diameter was used, also confirm the correlations of Chilton et al.

Uhl (9) extended the data for jacketed vessels into the low Reynolds number ranges commonly encountered with viscous materials. As seen from Table (2.1), his correlations follow the same general form as those of other workers except for a difference in the viscocity - ratio exponent and, for the anchor agitator, the change in Reynolds number exponent when the value of Reynolds number is below 300. Again, an effect of agitator type is reflected in different values of the correlation parameters. Uhl also made some runs with baffles, using the

paddle agitator, and found that the baffles had no appriciable effect in this range.

Pursell (10) continued the study of paddle agitators, and developed a correlation given in Table (2.1). This equation fits his data in addition to the data obtained by previous investigators using paddle agitators. It will be noted that he has included terms to account for the effect of blade width W and the ratio of tank diameter to impeller diameter.

Development of the exponents - In earlier correlations, adherence to precedent was more of a factor in determining the exponents a,b and c than the best representation of the data. Although the data indicated an absolute value of c larger than 0.14, Chilton et al. (2) admittedly applied 0.14 in deference to the well-known use of this value for forced convection in conducts in the classic work of Sieder and Tate (11). Then Kraussold (8), Cummings and West (6), Carroll (12), and Brown et al. (13) did like wise, all more or less influenced by Chilton et al. Uhl (9,14) found that c should be -0.24 for nonproximity impellers and this has been confirmed by the considerable work of Pursell. The precedent of $\frac{2}{3}$ for a and $\frac{1}{3}$ for b was certainly due to Chilton et al. Pursell recorrelated all paddle data readily available, namely, Carroll (12), Chilton et al. (2), Gordon (15), Uhl (9), along with fresh data of his own to produce his general relation where $a = \frac{3}{4}$, $b = 0.44$ and $c = -\frac{1}{4}$. Further support for an exponent, a greater than $\frac{2}{3}$ was given by Kraussold whose work indicated 'a' could be better interpreted to be 0.72.

Type of Impeller - Uhl (9,14), Brooks and Su (16) found that changing the type of impeller, with all other variables remaining the same, turbines were found to provide rates of heat transfer about 30½ greater than the paddle of the same diameter.

Multiple Impellers - The heat transfer rates from Cummings and West (6) for two curved-blade turbines running on a single shaft are about 15% greater than the rates for single turbines found by other investigators.

Clearance between Impeller and Tank Bottom - Pursell (10) found no effect for paddles, however, Uhl (9), found for a pitched-blade turbine, that a near-centered location gave 20% better rate of heat transfer than a near-bottom location. Ruston et al. (7) gave the first data on the use of vertical coils to act as baffles as well as heat transfer surfaces. Using Mixing Equipment Company flat-blade turbines, they noted that the heat transfer was best when the turbine was midway between tank bottom and water surface, based on tests with the liquid depth equal to tank diameter. This phenomenon is commented upon again in a later section.

Baffles - Brooks and Su (16) found that with a disk-type flat-blade turbine, vertical baffles improved thermal transfer rates 37% for Reynolds numbers from 1000 to 300,000. The improvement appeared to diminish from 37% to a negligible

value as the Reynolds number was reduced from 1000 to 200. These results of Brooks and Su held for one, two, or four paddles. They appear somewhat contradictory to test data by Uhl (14) with a flat-blade paddle, with and without four baffles for Reynolds numbers from 3000 to 300, which showed no improvement with baffles. The discrepancy may be explained by the difference in flow patterns produced by the agitators used in each case. Certainly these limited data suggest baffle as an expedient to promote heat transfer with turbines, with no increase in speed for cases where the Reynolds numbers are greater than 1000. This improvement would surely be at the expense of considerably greater power input.

Gassing - Kraussold and Pursell both found, as would be expected, that the dispersion of considerable quantities of gas in the fluid reduced the rate of heat transfer. Kraussold found the gassed condition from air induced by the vortex gave rates of heat transfer about ⅓ of those in nongassed condition.

2.2.1.2 Heat transfer to immersed coils

An immersed coil in an agitated vessel for heat transfer is generally in one of two forms, the helical coil or the vertical baffle type or the vertical baffle type. Dunlap and Rushton (17) extended the investigation of heat transfer from vertical tube-baffles in agitated vessels. Their final correlation used a Nusselt group based on the tube diameter and a viscocity ratio based on viscosity evaluated at the mean film temperature. The correlation also was expanded to

include the effect of the ratio of impeller diameter to tank diameter. Oldshue and Gretton (18) made an extencive study of heat transfer through helical coils in baffled systems. They also correlated the coefficient for heat transfer in a Nusselt group involving coil-tube diameter rather than vessel diameter. The correlation, somewhat more complicated than that of earlier workers, shows an effect of both impeller diameter and coil diameter besides those indicated by inclusion of these variables in the Reynolds and Nusselt groups, respectively. Although these diameters are expressed in terms of their ratios to tank diameter, the latter dimension was not varied in this study. The effect of viscocity ratio is considerably different from that of erlier investigators of agitated-vessel or pipe-flow heat transfer, and probably reflects a difference in flow patterns. Oldshue and Gretton (18) also noted that variations in the position of the baffles (at the vessel wall, 2.54 cm off the wall, or inside the coil) had little effect on the heat transfer. There was also some indication that a wider tube spaceing in the coil lowered the heat-transfer coefficient by a small amount. Thus, for the 4.45 cm tubing coil, changing the turn spacing from 2 to 4 tube diameters reduced the heat transfer coefficient by 4% for water (0.4 mPaS viscosity) and by 12% for oil (50 mPaS viscosity). Pratt's (19) work embraced a wide range of dimensional variables, the unlikely values for some of the exponents introduce some question concerning the advisability of using his relations directly. Very little of the other work was directly toward finding the effect of dimen-

sional variations. This is very apparent, from some of the studies (Table 2.1) where not even the coil diameter, d, was included in some of the correlations. Of the dimensional parameters only the effect of D,T, and to an extent, d, were indicated and none could be considered to be firmly established.

Dunlap and Rushton (17) showed that at low impeller speeds, the effect of agitation can be overshadowed by free convection and with increasingly higher speeds the heat transfer rates will level off because of the induction of gas from vortex formation. This latter effect was noted by many investigators. Vortices can be effectively minimized by the use of vertical baffle-type coils or plate baffles. Oldshue and Gretton (18) have shown that the vertical baffle-type coil will have a value of he 13% higher than for a helical coil in a baffled tank at conditions of comparable power input. In this connection, Oldshue and Gretton report that the baffle-type coil draws 75% the power of the helical coil with plate baffles at the same impeller diameter and speed.

Type of Impeller - Cummings and West (6) demonstrated that when all test conditions are the same, a pitched-blade turbine gave heat transfer rates about 10% less than a curved-blade turbine.

Number of Impellers - Cummings and West were unable to discern any change in rate of heat transfer with two curved-blade turbines installed on the same shaft as compared with only one turbine. More data are needed to establish more definitely the effect of this variable.

Reverse Direction of Pitched Turbine - Cummings and West found that reversing the rotation of a pitched-blade turbine made no discernible difference on h_c.

Agitator location - Pratt (19) stated that, for a paddle, vertical displacement between the top and bottom levels of the helical coil had no appreciable effect on the heat transfer coefficient. On the other hand, Rushton et al. (7) demonstrated conclusively for a disk-type flat-blade turbine with vertical baffle-type coils that the optimum rate of heat transfer occurs when the impeller is located in the center of the coil. With jackets, the pitched-blade turbine was about 20% more effective in an intermediate than in a low position. Obviously, the average circulation past the heat transfer surfaces and hence rate of heat transfer is better for intermediate positions.

Variation of depth of liquid - For variation of liquid depth from 83.82 to 104.14 cm, Pratt found no variation in h_c. These are the only known data on the effect of depth of liquid and certainly cannot be considered to be conclusive because of the narrow data range.

Shape of Tank - Pratt found that a 'square' tank with side dimension, l, gave 15% better heat transfer rates than a cylinder tank where the vessel diameter was the same as l. This was explained by marked observed turbulence (baffle effect) for the square tank in contrast to practically uniform swirl produced in the cylindrical tank.

Two Insoluble Phases - The effect of the presence of mineral oil in water on the heat transfer rate for two curved-blade turbines can be calculated from the data of Cummings and West (6). Calculation shows increase in h_c with the rise of water percentage in oil. In the two phase system, oil was dispersed in water and water wetted the coil.

Effect of Suspended Solids - For operating conditions similar to those for the two insoluble phases as noted above, Cummings and West reported decrease in h_c with the rise of solid content for an ion-exchange resin of 16 to 50 mesh suspended in toluene.

2.2.1.3 Heat transfer to particles in fluids

Hixson and Baum (20) measured the heat transfer coefficient between liquid and solid phases of the same material in a series of geometrically similar agitated vessels by putting frozen pieces into the liquid and observing the rate of melting. Materials were water, benzene, acetic acid, and nitrobenzene and approximately 1-in. cubes, blocks, and cylinders were used. The vessel size ranged from 15.24 to 60.96 cm with a single run in a 119.38 cm i.d. vessel. The agitator was a pitched-blade turbine, where agitator diameter was ⅓ of the vessel diameter, rotated at speeds from 200 to 400 rpm. Reynolds number ranged from $2X10^4$ to 10^6. Based on a method of calculation which allowed for the reduction in size of the melting solids, the data were correlated by $Nu = 0.83\ (Re)^{0.63}(Pr)^{0.5}$.

This relation did not correlate the data as well to-ward the end of a run as at the begining, probably because of the change in particle shape from the assumed original shape as the process continued. Hixon and Baum pointed out that the analogy between heat transfer and mass transfer is direct and therefore data for one process could be used to predict rates for the other.

2.2.1.4 Heat transfer to boiling fluids

The effect of agitation in increasing boiling heat transfer coefficients over nucleate, transition, and film boiling ranges was investigated by Pramak and West Water (21) Methanol was agitated at 200 to 1000 r.p.m. by a 7.62 cm diam. by 15.24 cm long horizontal steam-heated copper tube. Their results show that the agitation must be intense to produce even a slight improvement for nucleate boiling. However, speeds of 1000 r.p.m. increased the maximum film coefficient at the critical temperature difference by 25% and in film boiling speed had a noticeable effect, increasing the flux by upto 100 % at the maximum 1000 r.p.m. speed. An interesting point is that agitation did not change the critical temperature difference, which was about 10.5°C.

2.2.2 Proximity Agitators

When Metzner and Taylor (22) rotated a disk-type flat-blade turbine in a viscous corn syrup and an aqueous solution of sodium-carbony-methyl-cellulose (CMC), they noted, and the

photographs of the exposed surface would indicate, that only the material in the vicinity of the impeller was displaced or turned over to any practical extent. This reported information serves to emphasize that the less expensive, more convenient, nonproximity impellers cannot impel to turn over very viscous fluids for any significant distance. This example makes evident the role of slowly rotating, large area agitator, namely, to circulate high-consistancy materials to all sections of a vessel by the only practical action, positive displacement. For heat transfer operations it is desirable that this displacement be most marked adjacent to the heat transfer surfaces, therefore, the need for the proximity agitator. Blades which scrape the transfer surface are found to be necessary for the pseudoplastic types of non-Newtonian fluid, which have a flow-behavior index less than 1.0, and for situations where material accumulates on or tenaciously adheres to the wall surfaces. Besides the proximity sweeping feature, the agitator must generally incorporate blade elements which circulate the bulk of the material to and from the wall essentially by displacement action.

2.2.2.1 Close clearance sweepers

The most common form of close-clearance sweeper and that for which data have been obtained is the anchor or horseshoe agitator. Otherforms are the helical ribbon and the full helix, also called the helical screw, as is found in screw conveyors.

For the anchor, the known test conditions and sources are given in Table (2.1) and the experimental data have been correlated satisfactorily by

$$Nu = K\ (Re)^{a}\ (Pr)^{\frac{1}{3}}\ \left(\frac{\mu_w}{\mu}\right)^{-0.18}$$

where $K = 1.0$; $a = \frac{1}{2}$ for Re from 10 to 300 (viscous regime)

$K = 0.36$; $a = \frac{2}{3}$ for Re from 300 to 4×10^4 (turbulent regime).

For each system tested, the clearance, C_a, was varied and the results unexpectedly show that the film coefficients for the common range in practice, namely, C_a/D of 0.01 to 0.03, are 20 to 30% less than a smaller or some what greater clearances. It should be noted that for the data of Brown et al. (13), C_a/D are 0.017 and 0.08 with 20% better rate of heat transfer at the larger clearance. This phenomenon is considered in detail by Uhl and Vozmick (23). Almost all the work in the 59.69 cm diam. kettle used by Uhl and Voznick had a blade width of 5.08 cm However, a few runs made with a 7.62 cm blade showed no measurable difference in the heat transfer rates.

Published information for other close-clearance sweepers is extremely limited. Over-all coefficients are presented for several materials for straight ribbon, helical screw, plows, and varieties of the anchor in tabular form by Uhl & Gray (24).

2.2.2.2 Surface scrapers

Huggins (25) has clearly demonstrated that scraping action is efficacius for every viscous and non-Newtonian materials. He compared rates of heat transfer for various materials in a Dopp Kettle equipped with a double-motion agitator both with and without scrapers. Without scrapers the agitator might be considered to be equivalent to an anchor, but with good mixing of the entire charge. The clearance without scrappers was 1.11 cm, which with an average vessel diameter of 68.58 cm gives a clearance factor, C_a/D, of 0.016, which is within the clearance range that gives the minimum rate of heat transfer.

The information for high-speed scrapers (Votator) is limited to Houlton (26) for water and Skelland (27) for water, medium viscosity oil, and glycerol. Yarham (28) reports that the manufacturer of the rotator gives U of 0.568 to 1.419 $kW/m^2{}^oK$ for continuous processing of aluminum stearate and lithium greases. The data of Houlton were reduced to the correlation basis of the anchor agitator and are also plotted where they are found to fall on the average 20% below the equation given in the previous section 2.2.1.1.

2.3 Theoretical Considerations

In the previous section the experimental studies involving heat transfer to Newtonian fluids have been discussed. Theoretical aspects of heat transfer involved in a jacketed vessel are presented in this section.

Figure (2.1) shows an element of a vessel wall for consideration. On the outer side of the vessel is a heating medium such as steam, and on the inner is an agitated liquid being heated.

The condensing steam has a constant temperature T_s (^oC). The condensate forms a film of liquid at temperature T_{fo} (^oC). Beneath the water film are deposits of scale and dirt at temperature Two (^oC), in contact with the vessel wall. Similarly, adjacent to the inside wall of the vessel is a film of scale at temperature Twi (^oC). The agitated liquid in the vessel has an average temperature of Tb (^oC). The wall has a thickness of x meter, an outside heat-transfer area of Awo (m^2), and an inside heat-transfer area of Awi (m^2).

The following equation describes the process:

$$\text{Rate} = \frac{\text{Driving force}}{\text{Resistance}} \qquad (2.1)$$

where the driving force is the temperature difference T in ^oC, resistance is the reciprocal of conductance 1/U, and U is given in kW/m^2 hr ^oC and rate of heat flow per unit area Q/A in kW/m^2.

FIGURE. 2·1.

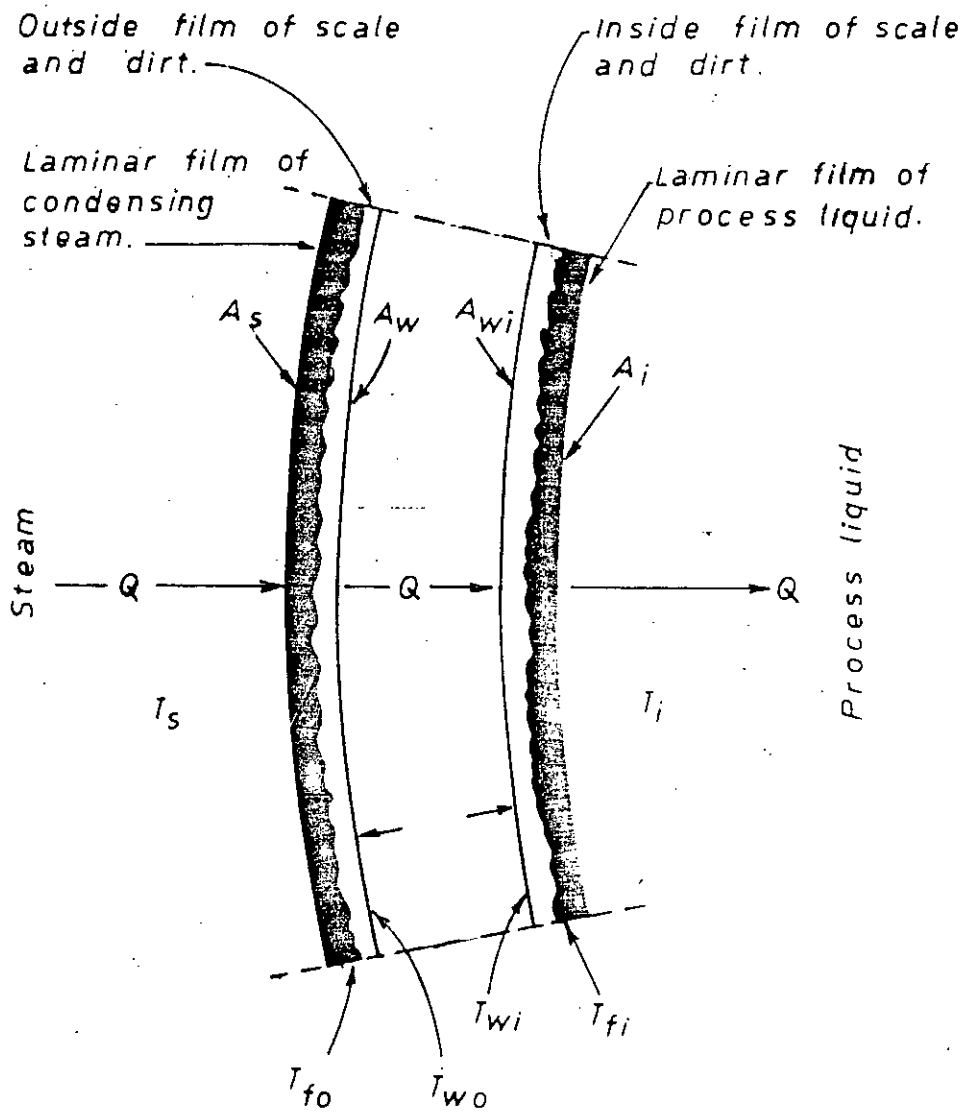

Resistances to heat transfer through a tank wall to a liquid being heated.

Therefore equation 2.1 can be written as:

$$\frac{\Delta T}{1/U} = \frac{Q}{A} \tag{2.2}$$

$$\text{or,} \qquad Q = UA\,\Delta T \tag{2.3}$$

Using equation (2.3), in turn, to each of the resistances shown in Figure 2.1, the following equations can be obtained.

$$Q = \underbrace{h_s A_s (T_s - T_{fo})}_{\text{Condensate film}} = \underbrace{h_{fo} A_{wo} (T_{fo} - T_{wo})}_{\text{Outside fouling film}} =$$

$$= \underbrace{(k/x)\, A_m (T_{wo} - T_{wi})}_{\text{Wall}} = \underbrace{h_{fi} A_{wi} (T_{wi} - T_{fi})}_{\text{Inside fouling film}} =$$

$$= \underbrace{h_i A_i (T_{fi} - T_b)}_{\text{Process liquid film}} \tag{2.4}$$

Since the temperature difference between the steam in the jacket and the agitated liquid in the vessel is the sum of the individual temperature differences across the various resistances, therefore

$$(T_s - T_b) = (T_s - T_{fo}) + (T_{fo} - T_{wo}) + (T_{wo} - T_{wi}) + (T_{wi} - T_{fi}) + (T_{fi} - T_b) \tag{2.5}$$

Equation (2.3) can also be written as

$$\Delta T = Q/UA \tag{2.6}$$

In terms of equation (2.4) and equation (2.6), equation (2.5) can be rewritten as:

$$\frac{Q}{A_i U_i} = \frac{Q}{h_s A_s} + \frac{Q}{h_{fo} A_{wo}} + \frac{Qx}{kAm} + \frac{Q}{h_{fi} A_{wi}} + \frac{Q}{h_i A_i}$$

The preceding equation reduces to

$$\frac{1}{U_i} = \frac{A_i}{h_s A_s} + \frac{A_i}{h_{fo} A_{wo}} + \frac{A_i x}{A_m k} + \frac{A_i}{h_{fi} A_{wi}} + \frac{1}{h_i} \qquad (2.7)$$

where the overall heat-transfer coefficient U_i is based on the inside area A_i.

Considering, $\emptyset = \left[\frac{A_i}{h_s A_s} + \frac{A_i}{h_{fo} A_{wo}} + \frac{A_i x}{A_m k} + \frac{A_i}{h_{fi} A_{wi}} \right]$

equation (2.7) becomes:

$$\frac{1}{U_i} = \frac{1}{h_i} + \emptyset \qquad (2.8)$$

For the steam heating of viscous liquids, h_i is small compared to h_s, and $\emptyset$ is small compared to $1/h_i$. In this case, $\emptyset$ can be taken as constant (29). Both $\emptyset$ and U_i can be determined experimentally, enabling values of h_i to be calculated.

Overall inside heat-transfer coefficient U_i are obtained as follows (9). At a particular point in time, the rate of heat

transfer from condensing steam in a jacket or coil to a liquid in an agitated vessel is:

$$Q = MC_p \frac{dT_b}{dt} = U_i A_i (T_s - T_b) \tag{2.9}$$

where T_b is the temperature of the batch of liquid in the vessel, Equation (2.9) can therefore be rewritten to give:

$$U_i = \frac{MC_p dT_b}{A_i dt(T_s - T_b)} \tag{2.10}$$

If the following four assumptions are tenable (9): (1) the over-all heat-transfer coefficient, U_i, is constant throughout the heating period; (2) the specific heat of the liquid, C_p, is constant over the temperature range of heating; (3) the heat transfer surface, A_i, remains constant; and (4) the rate of agitator work is proportional to any time to the rate of heat transfer through the kettle wall, it can be shown that

$$Q = \frac{MC_p}{t} (T_f - T_i) - Q_p$$

$$= U_i A_i \frac{(T_s - T_i) - (T_s - T_f)}{\ln \frac{T_s - T_i}{T_s - T_f}}$$

$$= U_i A_i \ (L.M.T.D) \tag{2.11}$$

Assuming radiation losses and the conversion of mechanical energy to sensible heat in the bulk fluid to be negligible, U_i, is easily calculated.

The first three assumptions are valid for all practical purposes and the fourth is considered to be tenable for the narrow temperature range covered by the test. Actually for a given test period the rate of agitator work was either constant or relatively constant, and the rate of heat transfer through the kettle wall varied almost directly with the L.M.T.D.

The film coefficient, h_i, for the kettle liquid was determined from the over-all coefficient, U_i, by a modification of the graphical method proposed by Wilson (30) for interpreting heat transfer in surface condensers. For this purpose equation (2.8) can be used. In an agitated vessel, the inside film coefficient h_i is a function of the impeller speed N (18). This relation is mathematically expressed as:

$$h_i = C(N)^a$$

where 'C' and 'a' are constants. For a number of systems (Table 2.1) the exponent 'a' has been found to be the fraction ⅔. If a plot is made of $1/U_i$ versus $(1/N)^{\frac{2}{3}}$, the intercept of the constant temperature lines with the ordinate is the value of $\emptyset$. This method is graphically illustrated in Figure (2.2).

FIGURE - 2·2

Figure Showing determination of ϕ

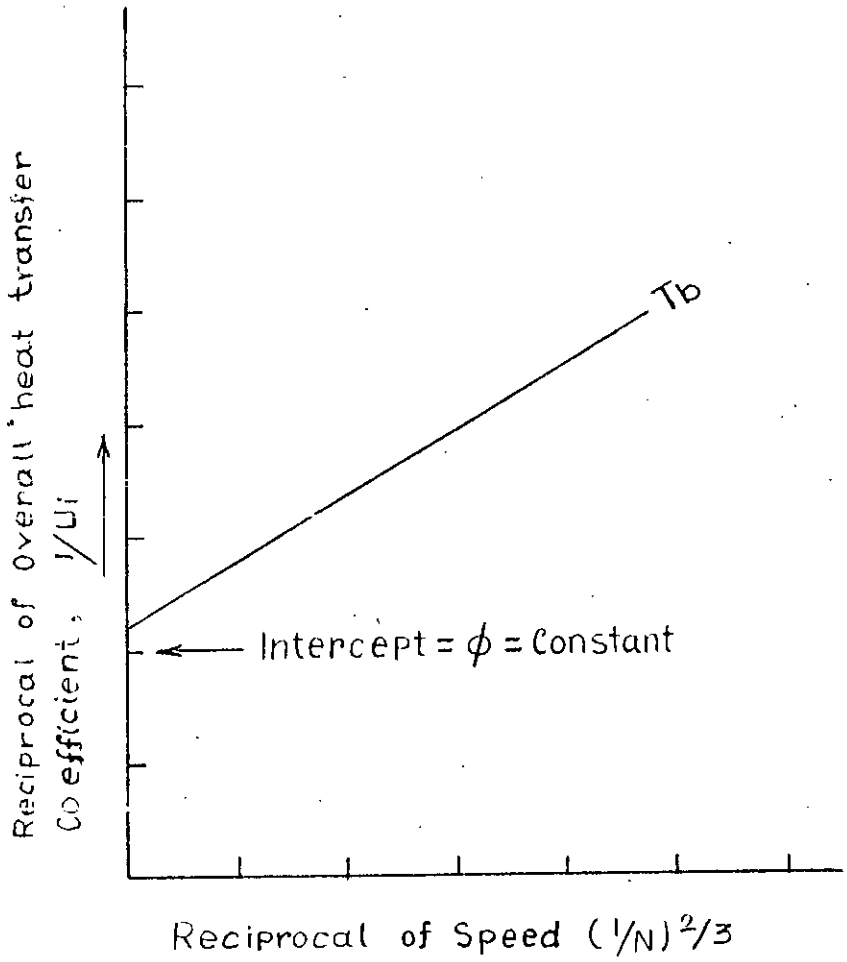

2.3.1 Dimensional Analysis

From equation 2.9, $Q=U_i A_i (T_s - T_b)$.

Now U_i, will be dependent upon the fluid properties, the impeller speed, and the geometry of the system. It is therefore possible to write:

$$U_i = f(\rho, \mu, \mu_w, C_p, k, g, N, D_i, D_T) \qquad (2.12)$$

The geometrical dimensions, other than the impeller diameter, D_i, and the tank diameter, D_T, could include minor impeller dimensions, baffle size and the number of the dimensions of any inserts in the vessel, for example coils or thermocouple wells. The fluid properties ρ, μ, C_p and k are evaluated at the bulk fluid temperature, T_b, whilst μ_w is the fluid viscosity at the wall temperature T_{wi}. This parameter, μ_w, is introduced following the work of Sieder and Tate (11).

By dimensional analysis, equation (2.12) may be reduced to give:

$$Nu = f(Re, Pr, Vis, Fr) \qquad (2.13)$$

The Froude number (Fr) characterises surface waves and non-level surface profiles due to vortex behaviour. In some cases vortex formation can be advantageously. For example, in the blending of solids into liquids the solid is sometimes fed into the vortex and is dispersed into the liquid at the impeller. However, in this work the r.p.m of the impeller is in the lower

range, therefore possibility of forming vortex is negligible. So the Froude number can be neglected.

Neglecting the dependence of the heat transfer coefficient upon the Froude number it is possible to express equation 2.13 in the following form:

$$Nu = KRe^{a}\ Pr^{b}\ Vis^{c} \tag{2.14}$$

where the parameters K, a, b, c, and the influence of the geometrical factors have to be evaluated by experiment.

There is no physical justification for the form of the functional relationship given in equation (2.14). However the form is similar to that used sucessfully in other heat transfer studies and the values of parameter K, a, etc. can be readily determined from experimental data.

TABLE 2.1

Correlations obtained by different authors

Sl. No.	Impeller	Vessel Insert	Fluids	Diameter of kettle (ft)	Re	Pr
1.	Wide paddle	None	Water, oil, kerosine	2.0	$6x10^2$ to $6x10^5$	3 to $2x10^3$
	Flat paddle	Coil	Water, oil, glycerol	1.0 5.0	284 to $2.4x10^5$	3 to $2x10^3$
2.	Flat and angled paddles	No baffles	Mineral oils	1.0	10^2 to 10^5	$3x10^2$ to $8.5x10^3$
3.	8-bladded turbine	No baffles	Mineral oils	1.0	10^2 to 10^5	$3x10^2$ to $8.5x10^3$
4.	Flat and 45° turbine	Baffles	Water, and lubricating oils oils	0.8	$2x10^2$ to $1.8x10^5$	5 to $2x10^3$
5.	3-bladed propeller	No baffles	Mineral oils	1.0	100 to $4x10^4$	300 to $8.5x10^3$
6.	Marine propeller	Baffles	Water, lubricating oils	5.0	200 to $1.8x10^5$	5 to $2x10^3$
7.	Propeller	No baffles	Nitration	5.0	$5.5x10^3$ to $3.7x10^4$	218 to $1.5x10^3$
8.	3-bladed propeller	Baffles	Various	2.0	$2.7x10^5$ to $2x10^6$	1.9 to 6.2

SL. No.	Correlation of Table 2.1	Ref.
1.	$Nuj = 0.17\ Re^{0.66}\ Pr^{0.5}$	15
	$Nuj = 0.36\ Re^{0.67}\ Pr^{0.33}\ Vis^{-.14}$	2
2.	$Nuj = E_j\ Re^{0.5}\ Pr^{b_j}\ Vis^{-.14}$; $0.74 < E_j < 1.6$ & $b_j = 0.24$ or 0.33 depending upon impeller geometry.	51
3.	$Nuj = E_j\ Re^{0.5}\ Pr^{0.33}\ Vis^{-.14}$; E_j varies from 1.0 to 1.2 depending upon the impeller position	51
4.	$Nuj = E_j\ Re^{0.55}\ Pr^{0.30}$; for flat turbines $E_j = 3.57$; 45° turbines $E_j = 2.71$	52
5.	$Nuj = 0.85\ Re^{0.5}\ Pr^{0.33}\ Vis^{-.14}$ or: $Nuj = 0.3\ Re^{0.67}\ Pr^{0.24}\ Vis^{-.14}$ for systems with diffuser.	52
6.	$Nuj = 0.64\ Re^{0.67}\ Pr^{0.30}$	52
7.	$Nuj = 0.54\ Re^{0.67}\ Pr^{0.25}\ Vis^{-.24}$	13
8.	$Nuj = 0.575\ Re^{0.6}\ Pr^{0.26} \left(\frac{DT}{D}\right)^{0.33} (C_{p_s}/C_{p_s,f})^{0.13} (\rho_f/\rho_s)^{0.16} \left[\phi/1-\phi\right]^{-0.04}$ Pr and Re based on suspension properties s refers to solid, f refers to fluid, ϕ volume concentration of solids.	49

Sl. No.	Impeller	Vessel Insert	Fluids	Diameter of kettle (ft)	Re	Pr
9.	Various flat paddles	Helical coils, no baffles	Water, iso-propanol	1.5, 2.0	$2x10^4$ to $5x10^5$	Not given
10.	Four-bladed Flat paddle	Helical coil no baffles	Water/tolune, water/kerosine	0.8	$3.7x10^4$ to $1.1x10^5$	Not given
11.	Paddle	Helical coil	Water, aqueous glycerol, castor oil	1.0	100 to $3x10^5$	Not given
12.	6-bladed, 3-angle blade turbines	Helical coil, baffles, baffle oil	Water, polyalkylene glycol	1.5 2.0	300 to $4x10^5$	4.4 to 520
13.	6-bladed turbines	Helical coil, baffles	Water, turbine oils	4.0	400 to $1.5x10^4$	23 to $6.3x10^3$
14.	3-bladed square pitch propellor	Helical coil baffles	Water	1.0	$2.5x10^4$ to $1.4x10^6$	Not given
15.	Various propellors	Helical coils, baffles	Water, oils	1.5	$6.5x10^4$ to $8.5x10^6$	Not given
16.	Anchor	Helical coil	Water, aqueous glycerol solutions	1.0	600 to 10^6	Not given
17.	Anchor	Helical coil	Water, castor oil, aqueous glycerol solutions	1.0	100 to $3x10^5$	Not given

SL. No.	Correlation of Table 2.1	Ref.
9	$Nuc = 34\ Re^{0.5}\ Pr^{.3}\ (C_s/H_c)^{0.8}\ (W/D_c)^{0.25}\ (D^2D_T/d_c^3)^{0.1}$	19
10.	$Nuc = 4.04\ Re^{0.42}\ Pr^{0.33}\ Vis^{-.14}$, volume average properties are used in Re & Pr.	53
11.	$Nuc = 23\ Re^{0.5}\ Pr^{0.3}\ \ 0.15\ (d_c/Dc)^{1.7}\ Vis^{-.14}$, $= n_B\ W \sin 0/H'$	54
12.	No correlation: data indicate that α_c (exponent of Re) varies with viscosity.	56
13.	$Nuc = 0.17\ Re^{0.67}\ Pr^{0.37}\ Vis^{-C_c}\ (D/DT)^{0.1}\ (d_c/D_T)^{0.5}$ where C_c varies with fluid viscocity; C_c=0.97 at 0.3 cP. & 0.18 at 1000 cP.	18
14.	1 propellor: $Nu_c=0.034\ Re^{0.62}\ (D_T/H_A)^{0.27}$, $(24700 < Re < 1.3X10^6)$ 2 propellor: $Nuc = 0.0886\ Re^{0.55}\ (H_{A,1}/D) - 0.007A(HA,2/DT)^{0.065}$, $(766000\ \ Re\ \ 1.3x10^6)$	55
15.	$Nuc = 0.0573\ Re^{0.67}\ Pr^{0.41}\ Vis^{-.034}\ (DT/HA)^{0.25A}\ (S'/D)^{2.33}$ $X\ (\eta_B)^{-0.077}\ (D_T/J)^{0.058}\ (dc/D_T)^{0.572}\ (Cs/d_c)^{-0.018}$	57 & 59
16.	$Nuc = 0.077\ Re^{\frac{2}{3}}\ Pr^{\frac{1}{3}}\ Vis^{-.14}\ (D_T/de)^{0.48}\ (D_T/D_c)^{0.27}$	62
17.	$Nuc = 23\ Re^{0.5}\ Pr^{0.3}\ \alpha^{0.15}\ (d_c/D_c)^{1.7}\ Vis^{-.14}$ $\alpha = \eta_b W \sin \theta\ /\ H'$	54

Sl. No.	Impeller	Vessel Insert	Fluids	Diameter of kettle (ft)	Re	Pr
18.	Anchor	No baffles	Mineral oils	1.0	200 to 10^5	300 to $8.5x10^3$
19.	Various anchors	Coil, no baffles	Water, glycerol, castor oil	1.0	100 to $4x10^5$	Not given
20.	Anchor	No baffles	Sulphonation liquors	5.0	$5.4x10^3$ to $3.7x10^4$	218 to $1.5x10^3$
21.	Anchors and ribbons	No baffles	Viscocity $5x10^2$ to $5x10^5$ c.p.	1.2 2.5	Not given	Not given
22.	Various Anchors	Coil, no baffles	Water, aqueous glycerol, aqueous molasses	1.0	130 to $4.3x10^3$	Not given
23.	Anchors	Coil no baffles	Water, aqueous glycerol	1.0 2.0 3.8	600 to 10^6	Not given
24.	Anchors	None	Cylinder oils	0.8 2.0	30 to $5x10^3$	$1.4x10^3$ to $7x10^4$

SL.No.	Correlation of Table 2.1	Ref.
18.	$Nuj = 1.38\ Re^{0.5}\ Pr^{0.28}\ Vis^{-0.14}$	51
19.	$Nuj = 0.46\ Re^{\frac{1}{3}}\ Pr^{\frac{1}{3}}\ Vis^{-.14}\ (\alpha)^{0.15}\ (D_T/D)^{0.1}\left[1-0.211(0.63-\alpha)\right]$ $\alpha = n_b W \sin\theta/H'$	45
20.	$Nuj = 0.55\ Re^{0.67}\ Pr^{0.25}\ Vis^{-0.14}$	13
21.	For the materials used a model based on heat conduction through a stagnant film is used.	63
22.	Correlates data interms of power requirement	43
23.	$Nuj = 0.35\ Re^{\frac{2}{3}}\ Pr^{\frac{1}{3}}\ Vis^{-0.14}$	58
24.	$Nuj = 1.0\ Re^{0.5}\ Pr^{0.33}\ Vis^{-0.18},\ 30 < Re < 300$ $Nuj = 0.38\ Re^{0.67}\ Pr^{0.33}\ Vis^{-0.18},\ 300 < Re < 500$	23, 24 & 9

3.0 PROGRAMME OF RESEARCH

Previous studies on Heat Transfer in Jacketed Vessels have been discussed in details in chapter 1 and 2. In this chapter outline of approach and objectives of the present investigations are presented.

3.1 Outline of Approach

As the world's energy sources are depleting, it is becoming increasingly essential to study and optimize heat transfer rates in process equipments in the various energy consuming industries.

It has been found through literature survey that study of heat transfer in jacketed vessels are very few. Moreover, studies using emulsions are nearly non-existant. Thus heat transfer studies involving emulsions is an important aspect of research work in this line. It was therefore decided to carry out heat transfer studies in a jacketed vessel with liquids such as water, sugar solutions, milk, oil and oil-water emulsions. For the present study, a vessel equipped with an anchor agitator was chosen and the jacket was used for both heating by steam and cooling by circulating water. The variables for this study were:

a) type of liquids

b) pressure of the steam (i.e., temperature of the steam).

c) revolution of the impeller (i.e., Reynolds number)

3.2 Objectives of Present Investigation

In order to suggest a possible guideline for efficient design of an jacketed vessel for heating and cooling of different liquids (such as, water, sugar solutions, milk, oil, oil-water emulsions) the following objectives were set for the present investigations.

i) Determination of heat transfer coefficients for heating at different Reynolds number.

ii) Determination of heat transfer coefficients for cooling at different Reynolds number.

iii) Development of heat transfer correlations for the particular system and liquids used for the experiment.

iv) Comparison of the results with the available literature.

4.0 EXPERIMENTAL

4.1 Experimental Flow Diagram

A flow diagram of the experimental set-up is shown in Figure 4.1 along with a key. In the following description, a number shown in brackets (( )) refers to Figure 4.1.

The Jacketed Kettle ((1)) was equipped with an anchor agitator ((2)) which was driven by an electric motor ((3)). The speed of the motor was controlled by a gear box ((4)) and also by a variable transformer ((5)). Steam was supplied by a electric boiler ((6)) via a control valve ((7)). A pressure guage ((8)) was used for measuring the pressure of the steam in the jacket ((9)) and a throttleing calorimeter ((10)) was used to measure the temperature of the steam. Four thermocouples ((11-14)) were used to measure temperatures. Two thermocouples were used to measure wall temperatures and the remaining two thermocouples were used for measuring the bulk liquid temperature. Four deflection milivoltmeter ((15-18)) were used to take the readings of the four thermocouples. The outlet valve of the steam jacket ((19)) was used as a outlet valve for steam & condensate in the heating runs and as a inlet valve of cooling water in the cooling runs. Valve ((20)) was used for draining out the liquid in the tank, and valve ((21)) was used for throttleing calorimeter for heating runs and as an outlet value for cooling water for cooling runs.

FIGURE. 4·1

EXPERIMENTAL SET UP.

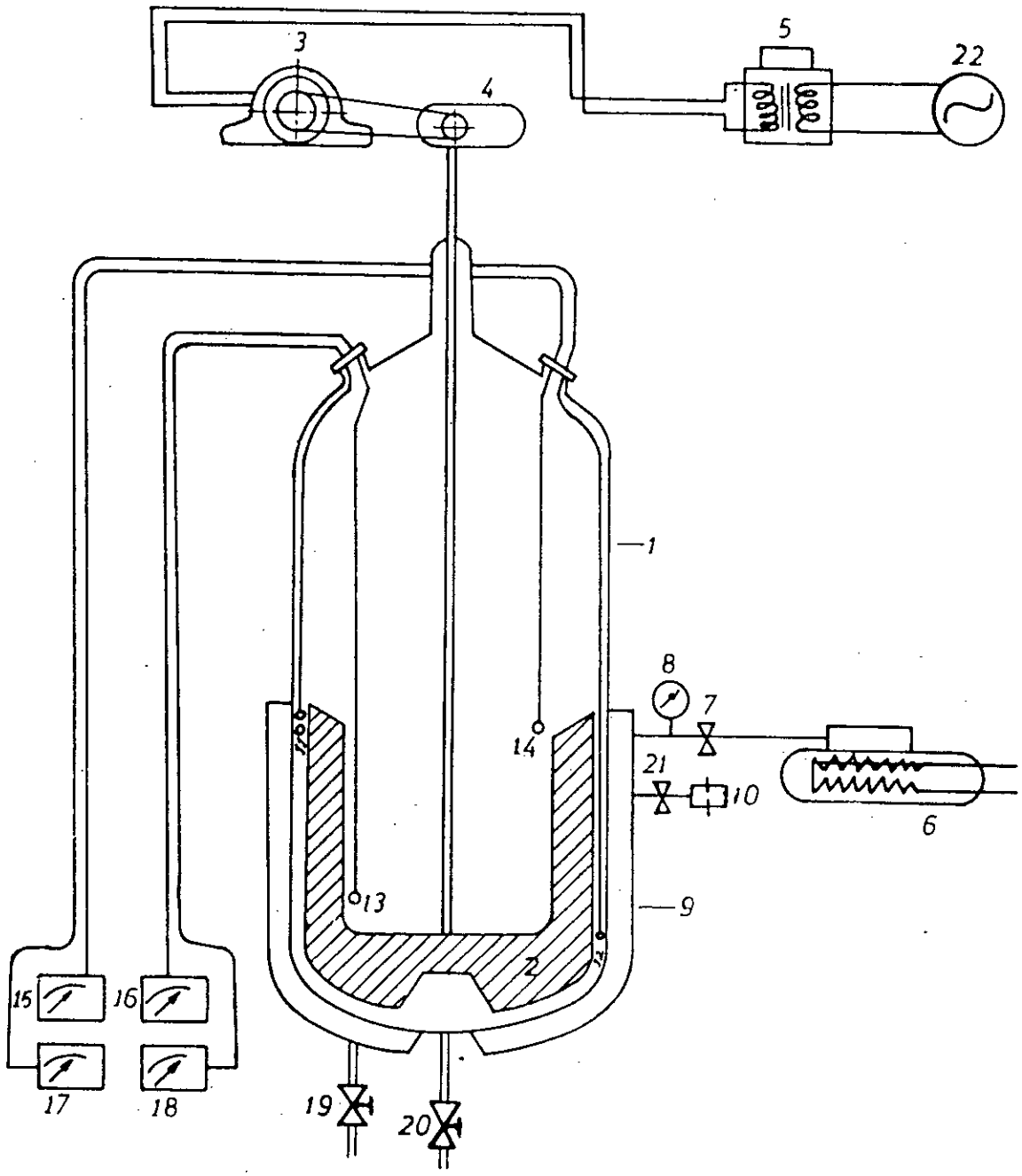

11-14 — THERMOCOUPLES.
2. — ANCHOR AGITATOR.
9. — JACKET.
8. — PRESSERE GAUGE.
7.19.20.21, VALVES.
10. — THROTTLEING CALORIMETER.
15 —18.- DEFLECTION MILI VOLT METER

3. ELECTRIC MOTOR.
4. GEAR BOX.
5. VARIABLE TRANSFORMER.
6. ELECTRIC BOILER.
22. 220 VOLT A.C. SOURCE
1. KETTLE.

4.2 Apparatus and Instruments

The schematic diagram of the Experimental apparatus is shown in Figures (4.2) and (4.3). The kettle was made of stainless steel with an outside diameter of 40.6 cm and inside diameter of 39.4 cm. The bottom of the kettle was dished shape. The height of the kettle was 45.7 cm in the middle and 40.6 cm from the side. Excluding 19.0 cm from the top of the kettle, the entire bottom portion was jacketed. The annulus was 5.1 cm. The volume of the kettle for the jacketed portion was 0.03 m^3 and the inside heat transfer area was 0.42 m^2. The kettle was fitted with an anchor agitator. The agitator sweep was 37.46 cm and height 27.94 cm. The clearence in each side was 0.97 cm. The throttleing calorimeter was made of mild steel with dimensions of 15.24 cm inside diameter and 25.4 cm height. The thermometer pocket was a copper tube oil pocket. The steam pressure was measured by a pressure guage in psig graduated in 2 psig (13.38 k Pag) intervals. All the thermometers used were in centigrade scale. Fe/con.(Iron-Constanton) thermocouples were used to measure the wall temperatures and NiCr/Ni Al (Nickel-Cromium/Nickel-Aluminium) thermocouples were used to measure the kettle fluid temperatures. Sensitive milivoltmeters were used to measure the thermocouple voltage. The thermocouples were calibrated against standard mercury thermometers.

FIGURE. 4·2

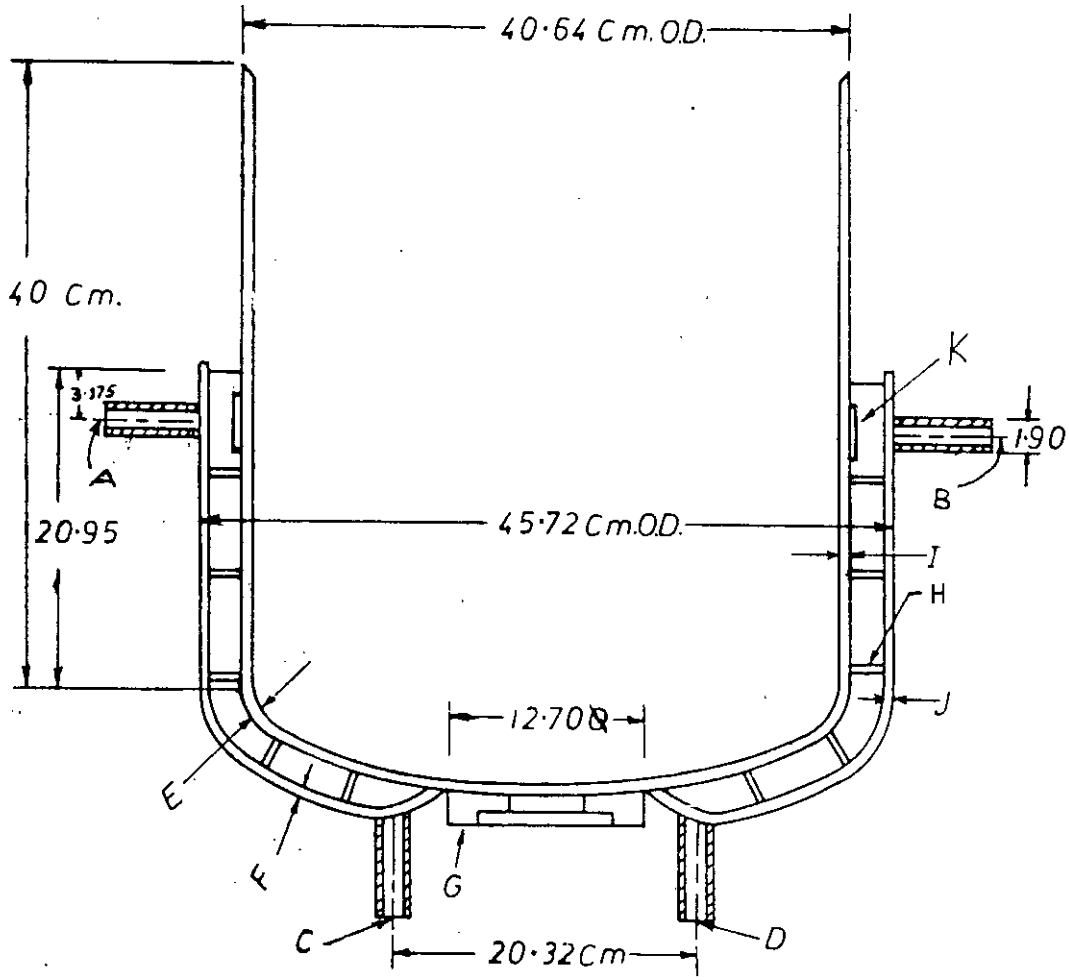

A,B,C,D,= 1·9 Cm 3000 # Steel Cplg.

E= ·6350 Cm thick Asme flgd & Dished Head, 40·64 Cm R of D, 2·54 Cm I.C.R., 3·81 S.F.,

F– ·475 Cm thick Asme flgd & Dished Head, 45·72 Cm R of D, 2·85 Cm I.C.R., 2·54 Cm S.F., C/S., A-285, "C".

G – 3·81 Cm Bottom outlet valve & Flange.

H– ·475 X 1·90 Cm Steel spiral baffle, 5·08 Cm Pitch turns 13·97 Cm.

I – ·6350 Cm thick TP 304 S/S

J – ·475 Cm thick C/S, A-285, "C".

K – ·3175 Cm X 3·81 Cm S Q. Steel impingment plate Tacked to Shell behind couplings, A & B only.

FIGURE. 4·3

ANCHOR AGITATOR

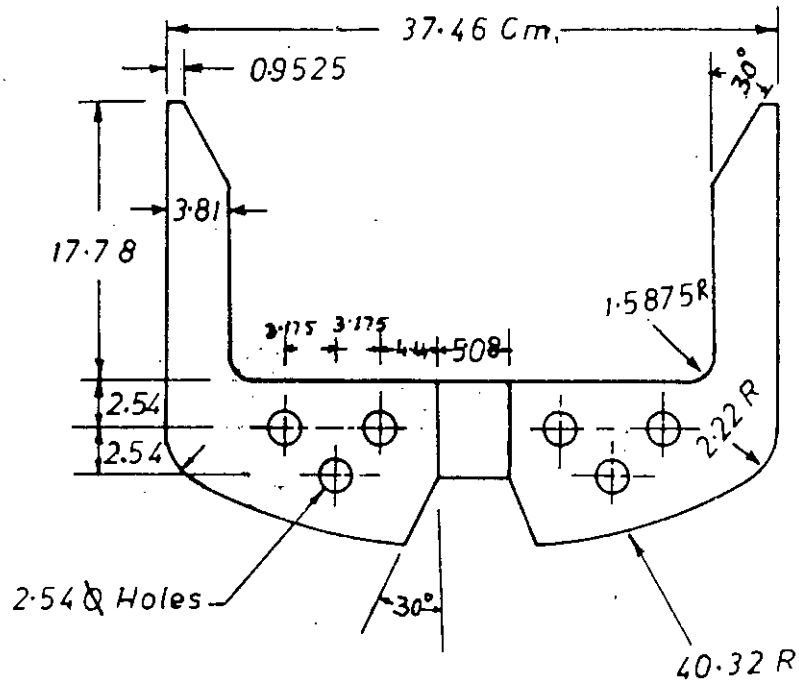

4.3 Setting and Positioning of Thermocouple in the surface of the wall and measurement of Temperature

Strek (31) discussed the temperature measurements of the surface of the cylindrical vessel wall in an agitated vessel. He showed that the average temperature coincided with the arithmetic mean of the temperatures at four locations in the vertical or longitudinal direction. Therefore Mizuchina et al (32) measured the temperatures at four places. N. Mitsuishi et al. (33) have also followed strek's method for the measurement of the temperature of the cylindrical vessel wall. Generally, in the range of high Reynolds number the accuracy of the temperature measurement may depend on how the thermocouple is positioned and fixed on the surface of the vessel. Otani et al (34) discussed four methods of setting a thermocouple on the surface of the vessel wall. N. Mitsuishi et al (33) investigated various methods of temperature measurement. This was done by setting thermocouples at five places in the longitudinal direction of the cylindrical wall using an agitated vessel with a draft tube for a range of high Reynolds number (about 2.15×10^5).

Three different methods of setting the thermocouple were employed as follows:

a) Setting a thermocouple by soldering.

b) Setting a thermocouple with silicon rubber (binding agent) and putting a piece of aluminium leaf on the agent.

c) Setting a thermocouple with a polymer cement (a binding agent) and putting a copper plate on the agent.

Methods (b) and (c) show almost the same temperature. However, the temperature of method (a) deviates slightly from the other methods. In any case, the error in measuring temperatures by these methods may be very small since the temperature variation among them is within 3%.

In the present work wall temperatures were measured by iron-constantan thermocouple fixed to the vessel wall by method (c) as stated above. The vessel wall temperature was measured by two thermocouples (Figure 4.1) positioned 180° apart and located ½ and ⅓ of the distance from the bottom of the vessel, similar to K.G. Patel et al. (35). Milivoltmeter was used to measure the voltage and the arithmetic average voltage was then converted to ^{o}C from the calibration curve. Two Nickel-Cromium/Nickel-Aluminium thermocouples (Figure 4.1) were used to measure the bulk fluid temperature, positioned so that their arithmetic average would give the average temperature.

4.4 Measurement of Physical Properties

The liquids used in this experiment were water, sugar solutions (10%, 15%, and 20%), Skimmed Milk (2.25% fat), Non Skimmed Milk (3.5% fat), Soyabean oil and Soyabean oil-water emulsions (2.25%, 3.5%, 15% and 25%). For the purpose of

calculations, the physical properties of these liquids such as specific heat, density, thermal conductivity and viscocity at different temperatures were required. The viscocity and density of skimmed and non skimmed milk were determined in the laboratory. Specific heat and data for milk were found from liturature (36). The properties of sugar solutions were obtained both from 'Cane Sugar Handbook' (37) and 'Handbook of Chemical Engineering' (38). The properties of water and soyabean oil were found from 'Handbook of Chemical Engineering' (38) and 'Vegetable Fats and oils' (39). Necessary extrapolation or intrapolation were made to fit the properties required for calculations. For the case of soyabean oil-water emulsions of different percentages, the properties of the pure liquid was first determined and then volume average properties were calculated.

4.5 Experimental Procedure

The height of the fluid in the kettle was kept constant (29 cm) in all experiment, to maintain a fixed volume of each fluid under study. A permanent mark was given at the side of the kettle to ensure the same height in each case. The experimental fluid which was kept in a drum was measured and then poured carefully into the kettle up to the mark. The weight of the drum containing rest of the liquid was again measured. The difference in the weight gives the weight of the liquid

poured into the kettle. The initial temperature of the fluid was noted by the thermocouples. The outlet value of the steam jacket was opened so that all the condensate if any can drain out. After draining out the condensate, the value was closed. The electric motor was switched on and the impeller speed was fixed by controlling the variable transformer and the gear box. Steam was then introduced into the jacket at a fixed pressure by controlling the valve. When the steam pressure in the jacket reached the set pressure, the stop-watch was started. The steam temperature was noted from the thermometer in the throttling calorimeter. The bulk fluid temperature was noted from thermocouples. The steam inlet valve was then stopped. The outlet valve of the jacket was opened and the steam was allowed to escape. This was the procedure of the heating run.

For the cooling run, the inlet temperature of the cooling water was measured by a thermometer and the temperature of the bulk liquid was measured by the thermocouples. The cooling water was introduced into the jacket via the outlet valve of the steam jacket which was placed at the bottom of the jacket. The valve of the throttling calorimeter placed in the top of the jacket was used as the outlet valve for the cooling water. The flow rate of the cooling water was measured by measuring the weight of the liquid passed through the jacket for a definite interval of time. The final temperature of the bulk fluid was measured by the thermocouples.

For each fluid, the heating run were carried out by similar procedure at 6 psig (41.37 kPa guage), 10 psig (68.95 kPa guage) and 20 psig (137.89 kPa guage) and for each pressure the impeller speeds were 45 rpm, 55 rpm, 65 rpm & 75 rpm. For the cooling run, the flow rate of the cooling water was kept more or less equal and the impeller speeds were 45 rpm, 55 rpm, 65 rpm and 75 rpm. During the experimental runs readings were taken with great care and frequent checks were made to ensure reproducibility.

5.0 RESULTS

This chapter deals with the systematic representation of the experimental results. The experimental data have been collected according to the procedure described in section 4.5 and are presented in tabular form in Appendix-A. The Mathematics involved in calculations have been explained in section 2.3. Sample calculation showing step by step computation have been shown in Appendix-C.

Calculated results have been presented in this section in Tables 5.1 for the following liquids respectively;
(i) water (ii) 10% sugar solution (iii) 15% sugar solution (iv) 20% sugar solution (v) skimmed milk (vi) soyabean oil (vii) 2.25% soyabean oil-water emulsion (viii) 3.5% soyabean oil-water emulsion (ix) 15% soyabean oil-water emulsion and (x) 25% soyabean oil-water emulsion (xi) non skimmed milk. The fluid properties used for this calculation were presented in Appendix-B.

Using these results graphs have been presented under the following sub-heads.

i) Nusselt Number (Nu) versus Reynolds number (Re)

ii) Heat transfer coefficient (h) versus Impeller speed (n)

iii) Reynolds number (Re) versus Heat Transfer Factor (J)

iv) General correlation : $Nu/(Pr)^{\frac{1}{3}} (Vis)^{-.14}$ versus Reynolds number (Re).

5.1 Nusselt Number Versus Reynolds Number

Figure (5.1) shows plots of Nusselt Number (Nu) versus Reynolds Number (Re) for all the eleven liquids. It may be seen from the figure that the slopes of all the heating curves corresponding to 100°C, 101°C and 103°C are nearly the same. The cooling curve for water, sugar solutions and oil and oil-water emulsions lies below the 101°C heating curve. But in the case of milk, this cooling curve lies above the 103°C heating curve.

5.2 Heat transfer coefficient versus Impeller Speed

Figure (5.2) shows plots of Heat transfer coefficient(h) versus Impeller speed (n) for all the eleven liquids. From the figures it is clear that heat transfer coefficient increases with the increase in agitator speed. However the slope of the curve decreases as the r.p.m. of the agitator increases.

5.3 Reynolds number versus heat transfer factor

Figure (5.3) shows plots of Reynolds number (Re) versus heat transfer factor (J_H) for all the eleven liquids. From the figure it is clear that slops of all the heating curves are nearly the same. The cooling curve for milk lies above the 103°C heating curve and for all other liquids it lies below the 101°C heating curve.

5.4 General Correlation

The data obtained in the present work were correlated. The correlating equation for the heating runs for the sugar solutions is

$$Nu = 0.0446\ (Re)^{0.6578}\ (Pr)^{\frac{1}{3}}\ \left(\frac{\mu_w}{\mu}\right)^{-0.14}$$

For oil-water emulsions the correlating equation for the heating run is

$$Nu = 0.0439\ (re)^{0.6795}\ (Pr)^{\frac{1}{3}}\ \left(\frac{\mu_w}{\mu}\right)^{-0.14}$$

and for all the heating data (excluding the data for oil) the correlating equation is

$$Nu = 0.0496\ (Re)^{0.6632}\ (Pr)^{\frac{1}{3}}\ \left(\frac{\mu_w}{\mu}\right)^{-0.14}$$

Figure (5.4) which shows the general correlation, was obtained by plotting $Nu/(Pr)^{\frac{1}{3}}\ (\mu_w/\mu)^{-0.14}$ versus Reynolds number. A straight line has been obtained. A figure showing standard deviation by plotting Nu(experimental) versus Nu(calculated) have been shown in Appendix-D. The calculated results and the regression analysis for the final correlation were done with the help of computer. The computer programes are given in Appendix-E.

EXPERIMENTAL DATA

TABLE 5.1

Sl. No.	Experimental Liquid	Steam pressure (gauge) P(kpa)	Impeller Revolution n(r.p.m)	Overall heat-transfer coefficient Ui(kw/m^2.K)	Heat transfer coefficient h(kw/m^2.K)	Reynold's number Re	Prandtl's number Pr	Nusselt number Nu	Heat transfer factor J	Viscocity ratio Vis	Wilson's plot intercept Ø
1.	WATER	41.37	75.0	0.33475	0.41888	345579	3.25123	255.83	173.96	0.91983	0.59999
2.			65.0	0.31204	0.38392	296177	3.28880	234.48	159.55	0.87827	
3.			55.0	0.28403	0.34237	244034	3.38019	209.10	141.52	0.84420	
4.			45.0	0.25337	0.29879	195564	3.45273	182.48	123.06	0.81479	
5.		68.95	75.0	0.35926	0.45419	352314	3.18675	277.39	189.94	0.91737	0.58178
6.			65.0	0.32900	0.40687	301180	3.23238	248.50	169.98	0.88280	
7.			55.0	0.30647	0.37298	253470	3.25123	227.79	155.95	0.85785	
8.			45.0	0.27038	0.32085	201840	3.34256	195.96	133.45	0.82316	
9.			75.0	0.41263	0.61575	357235	3.14106	376.07	259.28	0.89821	0.79946
10.			65.0	0.38441	0.55496	305108	3.18942	338.94	233.40	0.86268	
11.			55.0	0.35130	0.48850	253425	3.25123	298.35	204.93	0.82892	
12.			45.0	0.32428	0.43777	204243	3.30226	267.37	183.42	0.79576	
13.	SUGAR SOLN. (10%)	41.37	75.0	0.32250	0.37858	259105	4.31121	232.44	143.17	0.91489	0.45925
14.			65.0	0.29494	0.34115	219417	4.41563	209.46	128.15	0.88633	
15.			55.0	0.27293	0.31204	184046	4.45643	191.59	117.04	0.85077	
16.			45.0	0.23860	0.25796	147106	4.52010	164.53	100.18	0.81906	
17.		68.95	75.0	0.33392	0.42720	264576	4.21943	262.30	162.69	0.92090	0.65391
18.			65.0	0.30662	0.38351	225590	4.29081	235.47	145.56	0.86936	
19.			55.0	0.28411	0.34894	186816	4.38764	214.24	131.65	0.83682	
20.			45.0	0.25235	0.30223	149813	4.47936	185.56	113.39	0.80887	

Sl. No.	Experimental Liquid	Steam pressure (Guage) P(k Pa)	Impeller Revolution n(r.p.m)	Overall heat-transfer coefficient Ui(kw/m^2.K)	Heat transfer coefficient h(kw/m^2.K)	Reynold's number Re	Prandtl's number Pr	Nusselt number Nu	Heat transfer factor J	Viscocity ratio Vis	Wilson's plot intercept Ø
21.		137.89	75.0	0.37855	0.49340	273239	4.08185	302.94	190.11	0.90638	0.61488
22.			65.0	0.35487	0.45392	234839	4.13030	278.70	174.46	0.87352	
23.			55.0	0.32399	0.40458	193818	4.22455	248.41	154.60	0.83535	
24.			45.0	0.28959	0.35233	155054	4.32391	216.33	133.82	0.79906	
25.	SUGAR SOLN. (15%)	41.37	75.0	0.28972	0.34026	224249	5.04248	208.92	122.59	0.93583	0.51271
26.			65.0	0.26669	0.30894	192332	5.09599	189.68	111.36	0.90199	
27.			55.0	0.23860	0.27185	159601	5.19787	166.91	97.75	0.86863	
28.			45.0	0.21563	0.24243	129867	5.23356	148.85	87.24	0.84469	
29.		68.85	75.0	0.31152	0.41161	228393	4.94818	252.72	149850	0.92070	
30.			65.0	0.28934	0.37375	195621	5.00932	229.48	135.77	0.88607	
31.			55.0	0.26770	0.33842	163607	5.07047	207.78	122.98	0.85076	
32.			45.0	0.23801	0.29231	131114	5.18006	179.48	105.96	0.81554	
33.		137.89	75.0	0.35443	0.45810	237150	4.75963	287.41	172.63	0.90203	
34.			65.0	0.32953	0.42563	202170	4.84117	261.33	156.65	0.87263	
35.			55.0	0.30661	0.38815	168583	4.91508	238.32	142.77	0.83774	
36.			45.0	0.27067	0.33230	135086	5.02208	204.03	122.00	0.79807	
37.	SUGAR SOLN. (20%)	41.37	75.0	0.28337	0.35506	200587	5.80938	218.00	121.42	0.92105	
38.			65.0	0.26071	0.32020	170588	5.92409	196.60	108.91	0.88344	
39.			55.0	0.23864	0.28754	141512	6.04379	176.55	97.25	0.85371	
40.			45.0	0.21356	0.25190	113518	6.16873	154.66	84.72	0.81825	

Sl. No.	Experimental Liquid	Steam pressure (guage) P(k Pa)	Impeller Revolution n(r.p.m)	Overall heat-transfer coefficient U1(kw/m^2.K)	Heat transfer coefficient h(kw/m^2.K)	Reynold's number Re	Prandtl's number Pr	Nusselt number Nu	Heat transfer factor J	Viscocity ratio Vis	Wilson's plot intercept Ø
41.		68.95	75.0	0.30036	0.37696	204622	5.69221	231.45	129.86	0.90331	0.67652
42.			65.0	0.27896	0.34385	174443	5.78904	211.12	117.94	0.86399	
43.			55.0	0.25591	0.30949	144763	5.90622	190.02	105.57	0.82916	
44.			45.0	0.22703	0.25823	115720	6.04891	164.69	90.89	0.79317	
45.		137.89	75.0	0.34354	0.44048	213650	5.44504	270.45	153.97	0.91109	0.64061
46.			65.0	0.32090	0.40393	181750	5.54952	248.01	140.48	0.87190	
47.			55.0	0.29309	0.36084	150549	5.67181	221.55	124.72	0.83917	
48.			45.0	0.26154	0.31418	119879	5.83231	192.90	107.76	0.79468	
49.	MILK	41.37	75.0	0.37517	0.49433	231872	4.87513	307.69	181.38	0.91724	0.64255
50.	(SKIMMED)		65.0	0.35186	0.45466	196966	4.95843	283.00	165.98	0.88923	
51.			55.0	0.31966	0.40229	162923	5.07555	250.40	145.71	0.85025	
52.			45.0	0.28791	0.35327	129979	5.20828	219.89	126.89	0.81909	
53.		68.95	75.0	0.39162	0.53675	234593	4.79963	334.10	197.94	0.93980	0.69044
54.			65.0	0.36681	0.49122	200263	4.87513	305.76	180.25	0.91083	
55.			55.0	0.33435	0.43470	165904	4.98185	270.58	158.41	0.87565	
56.			45.0	0.30292	0.38303	132173	5.11981	238.42	138.36	0.83020	
57.		137.89	75.0	0.43662	0.60716	242361	4.64083	377.92	226.43	0.94336	0.64332
58.			65.0	0.41160	0.55984	207563	4.69813	348.47	207.99	0.90471	
59.			55.0	0.37506	0.49433	172211	4.79441	307.70	182.48	0.86047	
60.			45.0	0.33946	0.43431	137923	4.90113	270.33	159.18	0.83165	

Sl. no.	Experimental Liquid	Steam pressure (guage) P(k Pa)	Impeller Revolution n(r.p.m)	Overall heat-transfer co-efficient U(kw/m^2.K)	Heat transfer coefficient h(kw/m^2.K)	Reynold's number Re	Prandtl's number Pr	Nusselt number Nu	Heat transfer factor J	Viscocity ratio Vis	Wilson's plot intercept Ø
61.	OIL	41.37	75.0	0.25045	0.28988	8957	254.33	833.80	131.40	0.92962	0.54315
62.			65.0	0.23169	0.26505	7649	258.28	762.38	119.69	0.88843	
63.			55.0	0.21047	0.23764	6351	263.39	683.54	106.78	0.84473	
64.			45.0	0.18568	0.20650	5068	270.36	593.98	92.13	0.80062	
65.		68.95	75.0	0.27193	0.31083	9044	251.76	894.08	141.47	0.91143	0.46022
66.			65.0	0.24947	0.28183	7708	256.18	810.65	127.72	0.86485	
67.			55.0	0.22688	0.25333	6400	261.29	728.68	114.25	0.81593	
68.			45.0	0.20046	0.22083	5106	268.26	635.20	98.91	0.76525	
69.		137.89	75.0	0.32365	0.39533	8690	262.46	1137.29	177.56	0.89551	0.56065
70.			65.0	0.29555	0.35424	7388	267.80	1018.94	158.22	0.85683	
71.			55.0	0.27265	0.32164	6144	272.68	925.74	143.09	0.81765	
72.			45.0	0.24172	0.27961	4890	280.11	804.26	123.44	0.76611	
73.	OIL-WATER EMULSION (2.25%OIL)	41.37	75.0	0.32930	0.41635	291029	3.88590	258.87	165.57	0.93446	0.63421
74.			65.0	0.30658	0.38057	249483	3.92971	236.62	151.29	0.90154	
75.			55.0	0.27823	0.33785	207354	4.00308	210.06	133.96	0.86805	
76.			45.0	0.24986	0.29691	165520	4.10568	184.60	117.21	0.83215	
77.		68.95	75.0	0.35201	0.45639	300245	3.76310	283.76	183.44	0.93522	0.64972
78.			65.0	0.32382	0.41011	255388	3.83627	254.99	164.27	0.90586	
79.			55.0	0.30017	0.37289	212641	3.90048	231.85	149.20	0.86462	
80.			45.0	0.26697	0.32299	169653	4.00288	200.82	128.54	0.83512	

Sl. No.	Experimental Liquid	Steam pressure (guage) P(k Pa)	Impeller Revolution n(r.p.m)	Overall heat-transfer coefficient U1(kw/m^2.K)	Heat transfer coefficient h(kw/m^2.K)	Reynold's number Re	Prandtl's number Pr	Musselt number Nu	Heat transfer factor J	Viscocity ratio Vis	Wilson's plot intercept Ø
81.		137.89	75.0	0.40891	0.58391	316601	3.56352	363.05	238.81	0.94304	0.73295
82.			65.0	0.37998	0.52665	270046	3.62231	327.45	214.85	0.91467	
83.			55.0	0.34640	0.46427	224439	3.68999	288.66	189.00	0.87632	
84.			45.0	0.31830	0.41515	179872	3.76885	258.12	168.44	0.84237	
85.		41.37	75.0	0.33217	0.50423	272458	4.16301	316.72	197.94	0.93225	1.02727
86.			65.0	0.30944	0.45363	232634	4.22752	284.93	177.66	0.90335	
87.			55.0	0.28965	0.41234	194515	4.27968	258.99	161.49	0.86331	
88.			45.0	0.26120	0.35698	155908	4.37116	224.23	139.32	0.82963	
89.		68.95	75.0	0.36618	0.49794	278844	4.06478	312.77	197.01	0.93343	0.72262
90.			65.0	0.32941	0.43232	236484	4.15678	271.55	170.27	0.90382	
91.			55.0	0.30948	0.39862	197530	4.21216	250.38	156.99	0.86095	
92.			45.0	0.27827	0.34832	158497	4.29779	218.78	136.78	0.82534	
93.		137.89	75.0	0.41161	0.58937	289479	3.91143	370.19	235.95	0.94459	
94.			65.0	0.38329	0.53297	246540	3.98197	334.77	212.89	0.90617	
95.			55.0	0.34924	0.46935	204495	4.06478	294.81	187.18	0.85462	
96.			45.0	0.32061	0.41940	164180	4.14445	263.43	166.58	0.83171	
97.	OIL-WATER EMULSION (15% OIL)	41.37	75.0	0.30662	0.42842	185961	6.23870	296.73	161.74	0.93617	0.92725
98.			65.0	0.28958	0.39587	159027	6.32521	274.19	149.12	0.90463	
99.			55.0	0.26694	0.35475	132461	6.42822	245.70	133.34	0.86387	
100.			45.0	0.23844	0.30613	105945	6.58093	212.03	114.46	0.83299	

Sl. No.	Experimental Liquid	Steam pressure (guage) P(k Pa)	Impeller Revolution n(r.p.m)	Overall heat-transfer co-efficient Ui(kw/m^2.K)	Heat transfer coefficient h(kw/m^2.K)	Reynold's number Re	Prandtl's number Pr	Nusselt number Nu	Heat transfer factor J	Viscocity ratio Vis	Wilson's plot intercept Ø
101.		68.95	75.0	0.34634	0.42338	191730	6.04532	293.24	161.47	0.94082	0.52540
102.			65.0	0.30659	0.36546	161986	6.20604	253.12	138.52	0.90691	
103.			55.0	0.28979	0.34183	135404	6.28461	236.76	129.46	0.86376	
104.			45.0	0.25554	0.29517	107754	6.46685	204.44	110.98	0.83524	
105.		137.89	75.0	0.39464	0.58890	199040	5.81642	407.88	227.51	0.94040	0.83588
106.			65.0	0.36621	0.52775	170193	5.89885	365.53	203.37	0.91197	
107.			55.0	0.33785	0.47081	141701	5.99765	326.09	181.02	0.87029	
108.			45.0	0.30941	0.41735	113446	6.13284	289.06	159.62	0.84349	
109.	OIL-WATER EMULSION (25% OIL)	41.37	75.0	0.29526	0.39329	128867	9.23554	299.11	142.64	0.93438	0.84422
110.			65.0	0.27822	0.36362	110377	9.34872	276.55	131.72	0.90698	
111.			55.0	0.25552	0.32580	91701	9.52729	247.79	117.55	0.86644	
112.			45.0	0.22717	0.28107	73337	9.75437	213.77	100.80	0.83553	
113.		68.95	75.0	0.32356	0.41883	132204	8.99511	318.54	153.42	0.93982	0.70302
114.			65.0	0.29512	0.37237	112363	9.17789	283.21	135.72	0.90608	
115.			55.0	0.27821	0.34586	93830	9.30373	263.04	125.75	0.86943	
116.			45.0	0.24419	0.29480	74772	9.56103	224.20	106.64	0.80287	
117.		137.89	75.0	0.38034	0.54188	137748	8.62040	412.12	201.38	0.93557	0.78380
118.			65.0	0.35210	0.48631	117795	8.74202	369.86	180.19	0.90350	
119.			55.0	0.32365	0.43367	97801	8.91426	329.82	159.95	0.86932	
120.			45.0	0.29528	0.38421	78626	9.07806	392.20	141.05	0.84558	

Sl. No.	Experimental Liquid	Steam pressure (guage) P(k Pa)	Impeller Revolution n(r.p.m)	Overall heat-transfer coefficient Ui(kw/m^2.K)	Heat transfer coefficient h(kw/m^2.K)	Reynold's number Re	Prandtl's number Pr	Nusselt number Nu	Heat transfer factor J	Viscocity ratio Vis	Wilson's plot intercept Ø
121.	MILK(NON-SKIMMED)	41.37	75.0	0.36913	0.50410	213654	5.28377	313.78	180.04	0.93252	0.72533
122.			65.0	0.34074	0.45260	180109	5.43470	281.72	160.19	0.88602	
123.			55.0	0.31235	0.40384	150310	5.51284	251.37	142.30	0.84749	
124.			45.0	0.28385	0.35744	120220	5.64299	222.49	125.00	0.81673	
125.		68.95	75.0	0.38614	0.45485	215672	5.23170	283.12	163.00	0.92537	0.39121
126.			65.0	0.36345	0.42369	184245	5.30978	263.73	151.12	0.88971	
127.			55.0	0.32371	0.37065	151553	5.46593	230.71	130.98	0.84429	
128.			45.0	0.28963	0.32664	121490	5.58311	203.32	114.64	0.81585	
129.		137.89	75.0	0.42584	0.60086	223480	5.04431	374.01	217.95	0.92620	0.66404
130.			65.0	0.40890	0.55768	191952	5.09116	353.35	205.33	0.89724	
131.			55.0	0.36316	0.48319	157701	5.24731	300.76	173.08	0.84971	
132.			45.0	0.33498	0.43455	126351	5.36185	270.49	154.58	0.82039	

COOLING RUN

Sl. No.	Experimental Liquid	Steam pressure (guage) P(k Pa)	Impeller Revolution n(r.p.m)	Overall heat-transfer coefficient Ui(kw/m^2.K)	Heat transfer coefficient h(kw/m^2.K)	Reynold's number Re	Prandtl's number Pr	Nusselt number Nu	Heat transfer factor J	Viscosity ratio Vis	Wilson's plot intercept Ø
1.	WATER		75.0	0.29528	0.34964	285015	3.96324	213.54	134.77	1.07593	0.52658
2.			65.0	0.27569	0.32251	252176	3.87998	196.97	125.18	1.11012	
3.			55.0	0.24689	0.28379	211237	3.92028	173.32	109.77	1.10349	
4.			45.0	0.22109	0.25023	180058	3.75908	152.82	98.13	1.15654	
5.	SUGAR SOLN. (10%)		75.0	0.28404	0.37935	242525	4.61693	232.92	139.64	1.05077	0.88448
6.			65.0	0.25916	0.33622	211540	4.58636	206.44	124.62	1.06111	
7.			55.0	0.23472	0.29621	182430	4.49717	181.87	109.94	1.08953	
8.			45.0	0.21690	0.26838	147085	4.56596	164.79	99.13	1.07646	
9.	SUGAR SOLN. (15%)		75.0	0.27385	0.30975	251145	4.50481	190.18	115.03	1.05204	0.42313
10.			65.0	0.25111	0.28096	219581	4.46407	172.51	104.65	1.06564	
11.			55.0	0.22910	0.25369	185493	4.47171	155.77	94.44	1.07066	
12.			45.0	0.20124	0.21998	151019	4.49465	135.06	81.75	1.07256	
13.	SUGAR SOLN. (20%)		75.0	0.26661	0.31700	258825	4.50229	194.64	117.75	1.05263	0.59626
14.			65.0	0.24677	0.28935	226050	4.46660	177.66	107.76	1.06846	
15.			55.0	0.22181	0.25561	192117	4.44626	156.94	95.34	1.09454	
16.			45.0	0.19924	0.22609	158682	4.40293	138.82	84.60	1.11979	
17.	MILK (SKIMMED)		75.0	0.50064	0.63740	207343	5.44773	427.87	242.83	1.06594	0.54269
18.			65.0	0.46500	0.62195	177055	5.53103	387.13	218.60	1.05929	
19.			55.0	0.42700	0.55580	151696	5.46076	345.95	196.16	1.09818	
20.			45.0	0.38607	0.48841	124609	5.42953	304.01	172.69	1.11696	
21.	OIL		75.0	0.22716	0.24667	7347	312.92	709.50	104.10	1.08972	0.34819
22.			65.0	0.20730	0.22342	6362	313.21	642.65	94.26	1.10355	
23.			55.0	0.18753	0.20062	5408	311.71	577.07	84.78	1.13119	
24.			45.0	0.16514	0.17522	4432	311.16	503.98	74.09	1.14066	

Sl. No.	Experimental Liquid	Steam pressure (guage) P(k pa)	Impeller Revolution n(r.p.m)	Overall heat-transfer coefficient Ui(kw/m^2.K)	Heat transfer coefficient h(kw/m^2.K)	Reynold's number Re	Prandtl's number Pr	Nusselt number Nu	Heat transfer factor J	Viscocity ratio Vis -	Wilson's plot intercept Ø
25.	OIL-WATER EMULSION (2.25%)		75.0	0.31742	0.44939	278578	4.06167	279.41	174.90	1.07544	0.92515
26.			65.0	0.28994	0.39522	242465	4.04695	246.35	154.39	1.09016	
27.			55.0	0.27527	0.36933	205452	4.04107	229.63	143.96	1.11701	
28.			45.0	0.24416	0.31540	169046	4.01779	196.10	123.17	1.13210	
29.	OIL-WATER EMULSION (3.5%)		75.0	0.29135	0.42232	265231	4.27968	265.26	163.18	1.07145	1.05446
30.			65.0	0.27262	0.38407	230999	4.25829	241.24	148.64	1.09119	
31.			55.0	0.25392	0.34798	195867	4.24910	218.57	134.76	1.11150	
32.			45.0	0.22740	0.30003	160825	4.23355	188.45	116.32	1.13353	
33.	OIL-WATER EMULSION (15%)		75.0	0.28984	0.37019	175068	6.64306	256.40	136.19	1.08481	0.74886
34.			65.0	0.27251	0.34238	150061	6.71538	237.14	125.50	1.08374	
35.			55.0	0.24414	0.29876	127582	6.68272	206.93	109.69	1.10987	
36.			45.0	0.22139	0.25539	104754	6.65827	183.81	97.55	1.13128	
37.	OIL-WATER EMULSION (25%)		75.0	0.25552	0.27929	120816	9.87810	212.41	98.84	1.07999	0.33309
38.			65.0	0.23870	0.25931	103556	9.98566	197.22	91.44	1.08202	
39.			55.0	0.21595	0.23269	88036	9.93785	176.97	82.18	1.10753	
40.			45.0	0.18734	0.19980	72448	9.87810	151.96	70.71	1.12234	
41.	MILK (NON-SKIMMED)		75.0	0.35766	0.38150	200353	5.64292	237.46	133.18	1.07935	0.17471
42			65.0	0.31239	0.33043	174672	5.60911	205.67	115.58	1.09977	
43.			55.0	0.28397	0.29879	148476	5.58311	185.98	104.66	1.12823	
44.			45.0	0.25535	0.26727	122307	5.54407	166.36	93.83	1.15491	

TABLE 5.2

RESULTS OF THE CONSTANTS OBTAINED BY

REGRESSION ANALYSIS

Equation: $NU = A1\ Re^{(A2)}\ Pr^{\frac{1}{3}}\ (\mu_w/\mu)^{0.14}$

	HEATING			COOLING			HEATING & COOLING		
	A1	A2	SD%	A1	A2	SD%	A1	A2	SD%
SUGAR SOLUTION	.0446	.6578	11.11	.0237	.6874	5.27	.0387	.664	16.54
WATER AND SUGAR SOLUTIONS	.0455	.6571	10.95	.0232	.6939	5.88	.0395	.664	17.51
OIL-WATER EMULSIONS	.0439	.6795	18.39	.0345	.6803	2.35	.0305	.680	29.53
ALL DATA (WATER, OIL, MILK, SUGAR SOLNS, & OIL-WATER EMULSIONS)	.0676	.6524	39.52	.0347	.6889	24.45	.0583	.660	42.88
ALL DATA EXCEPT OIL	.0496	.6632	19.807	.02866	.6894	22.52	.0439	.6685	23.73
ALL DATA EXCEPT OIL & OIL-WATER EMULSIONS	.0517	.6524	17.143	.0252	.6958	25.72	.0558	.6611	39.4

FIGURE. 5·1

PLOT OF NUSSELT NUMBER (NU) VS. REYNOLDS NUMBER (RE).

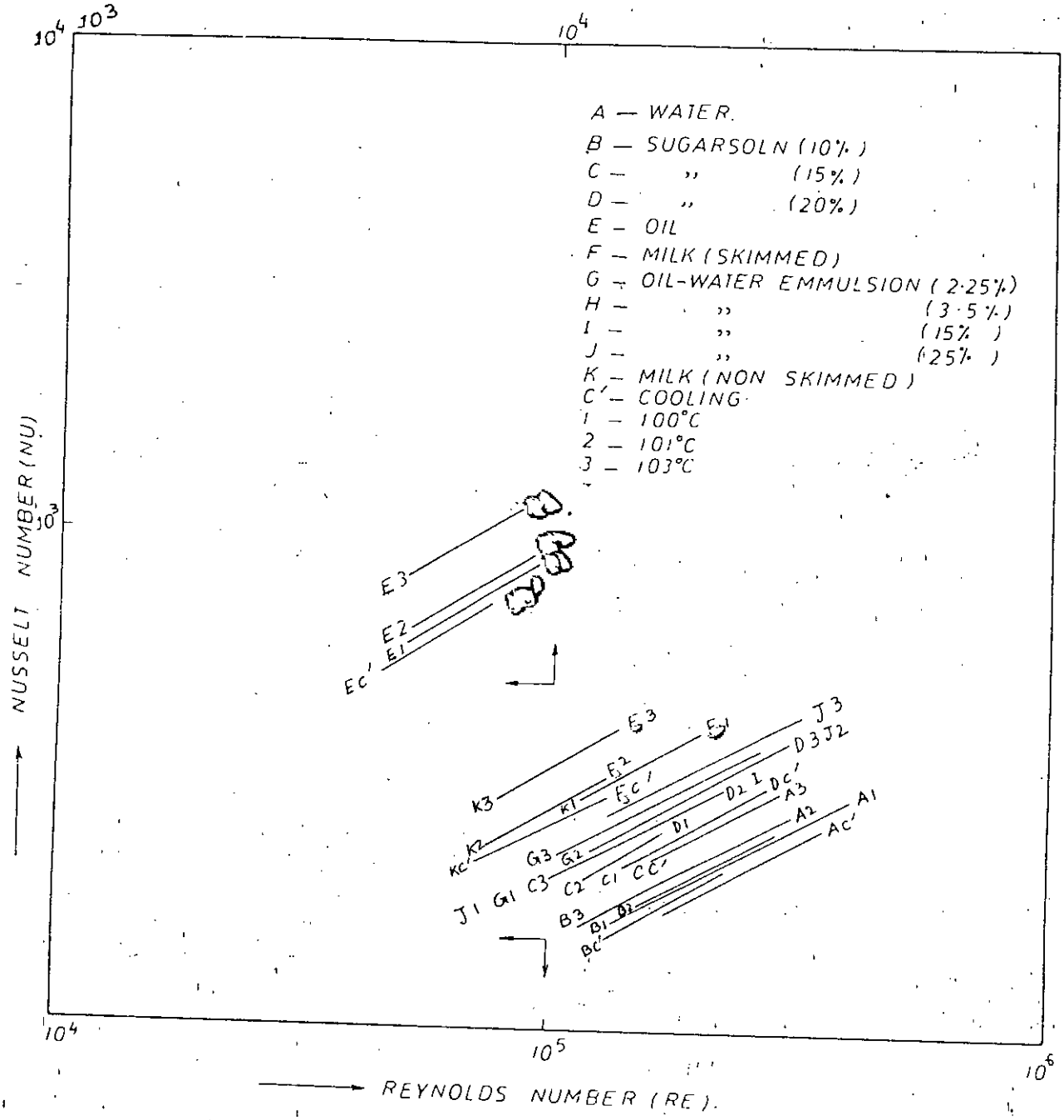

FIGURE - 5·2

HEAT TRANSFER COEFFICIENT VS IMPELLER SPEED.

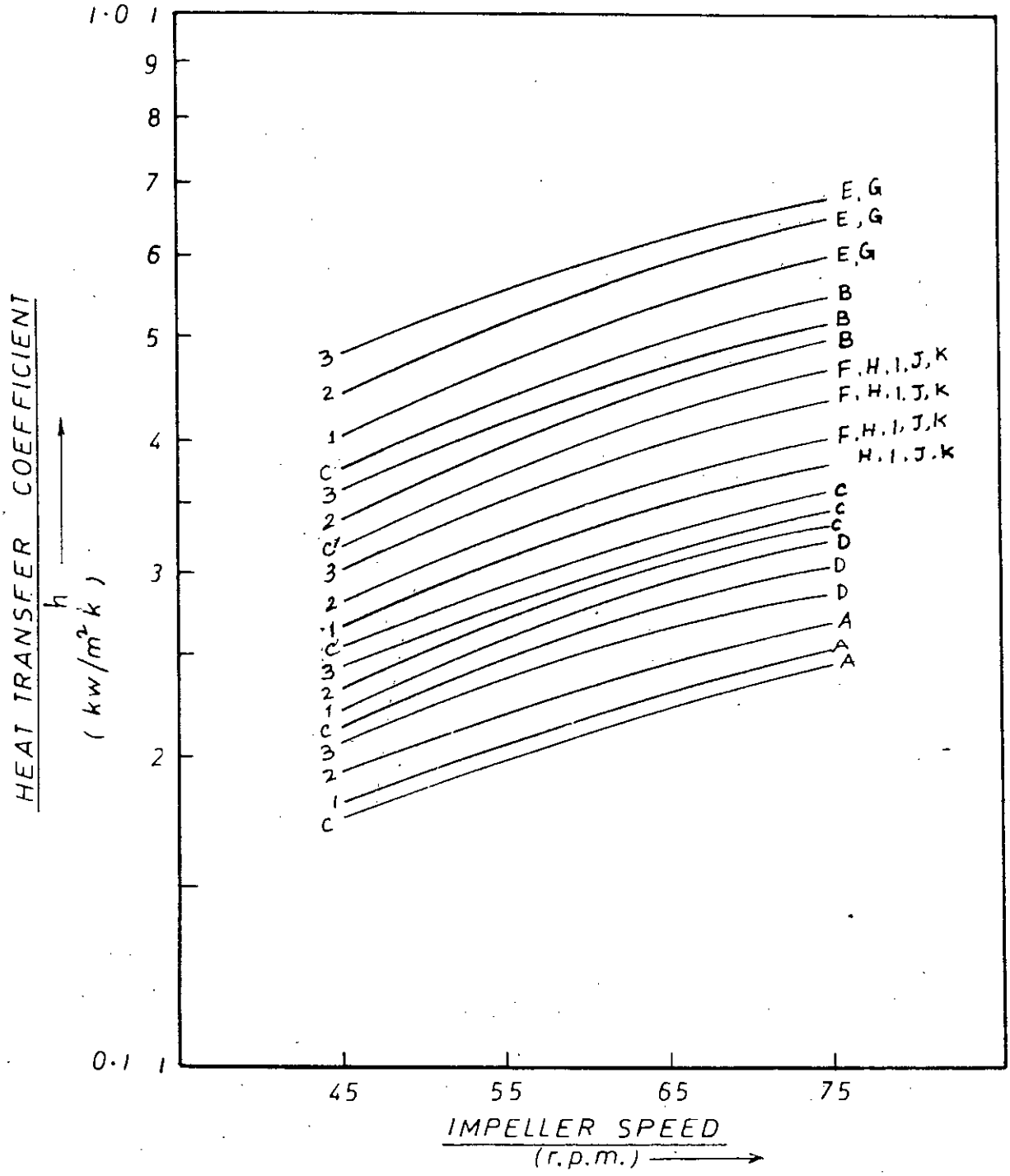

A — WATER.	C' COOLING	G-MILK (NON SKIMMED).
B — 10% SUGAR.	1 - 100°C	H-2·25% OIL WATER.
C — 15% ,,	2-101°C	I - 3·5% ,, ,,
D — 20% ,,	3-103°C	J-15% ,, ,,
E — MILK (SKIMMED).		K-25% ,, ,,
F — OIL.		

FIGURE. 5·3

PLOT OF REYNOLDS NUMBER (RE) VS HEAT TRANSFER FACTOR (J).

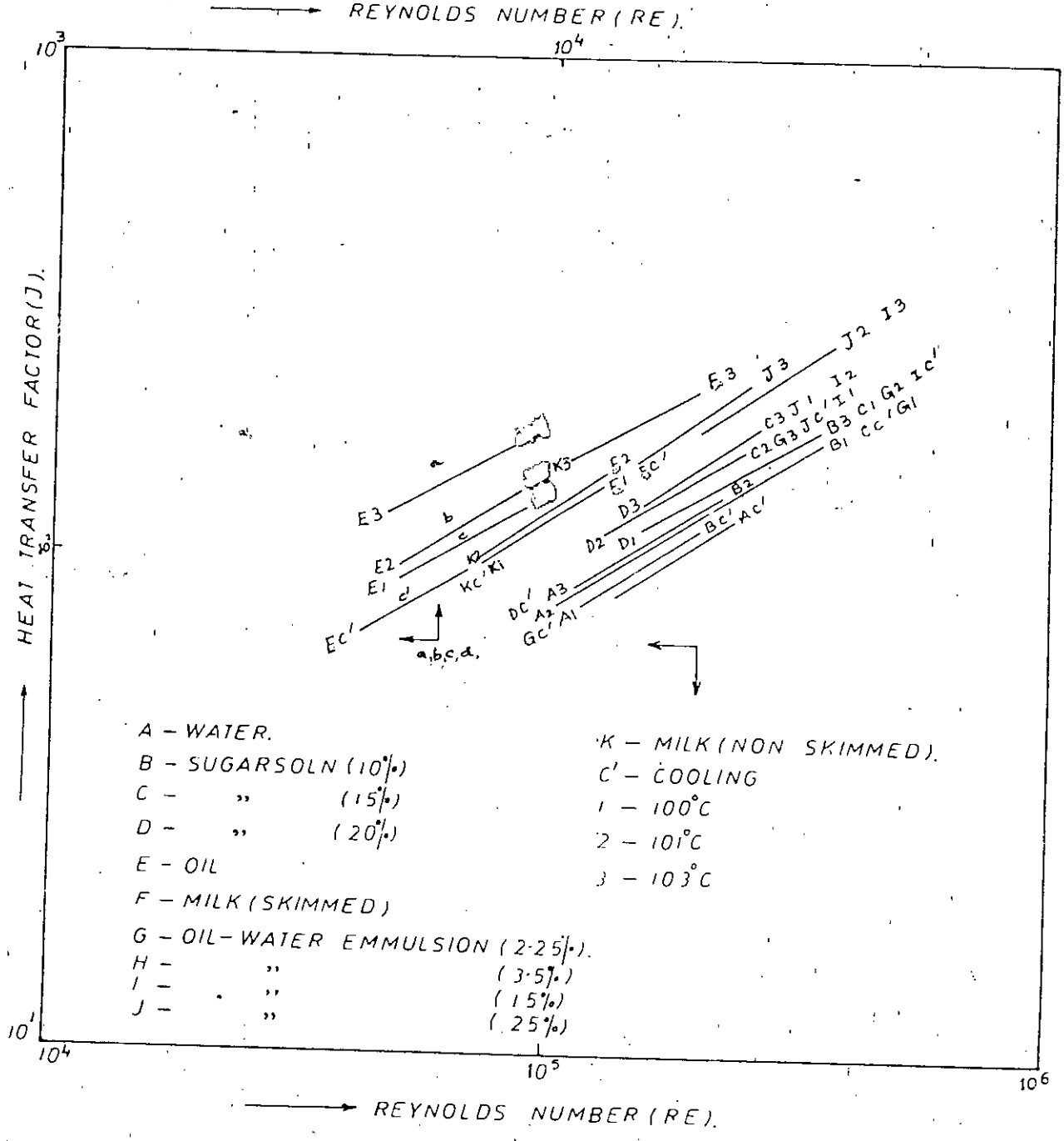

FIGURE- 5·4

GENERAL CORRELATION

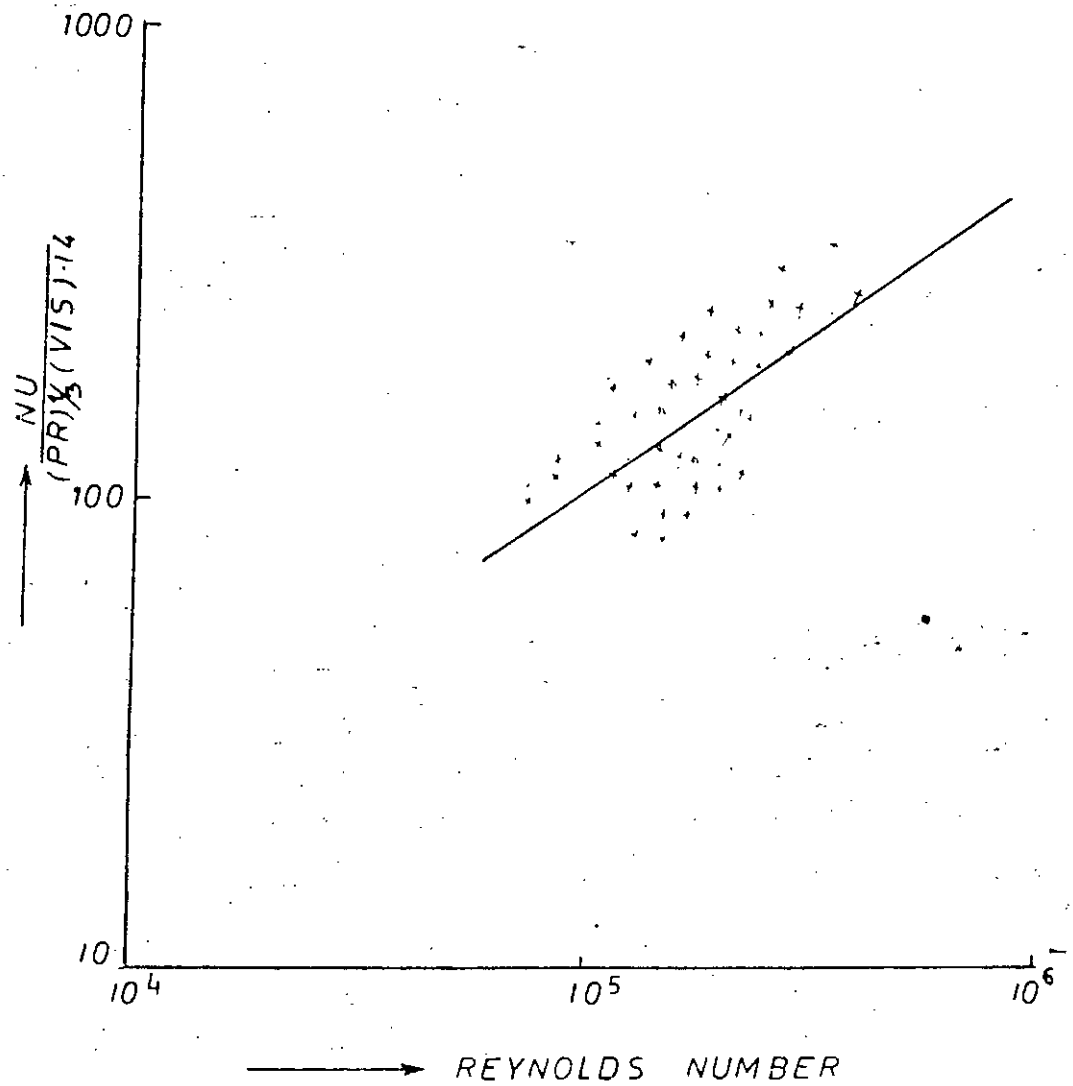

FIGURE. 5·5

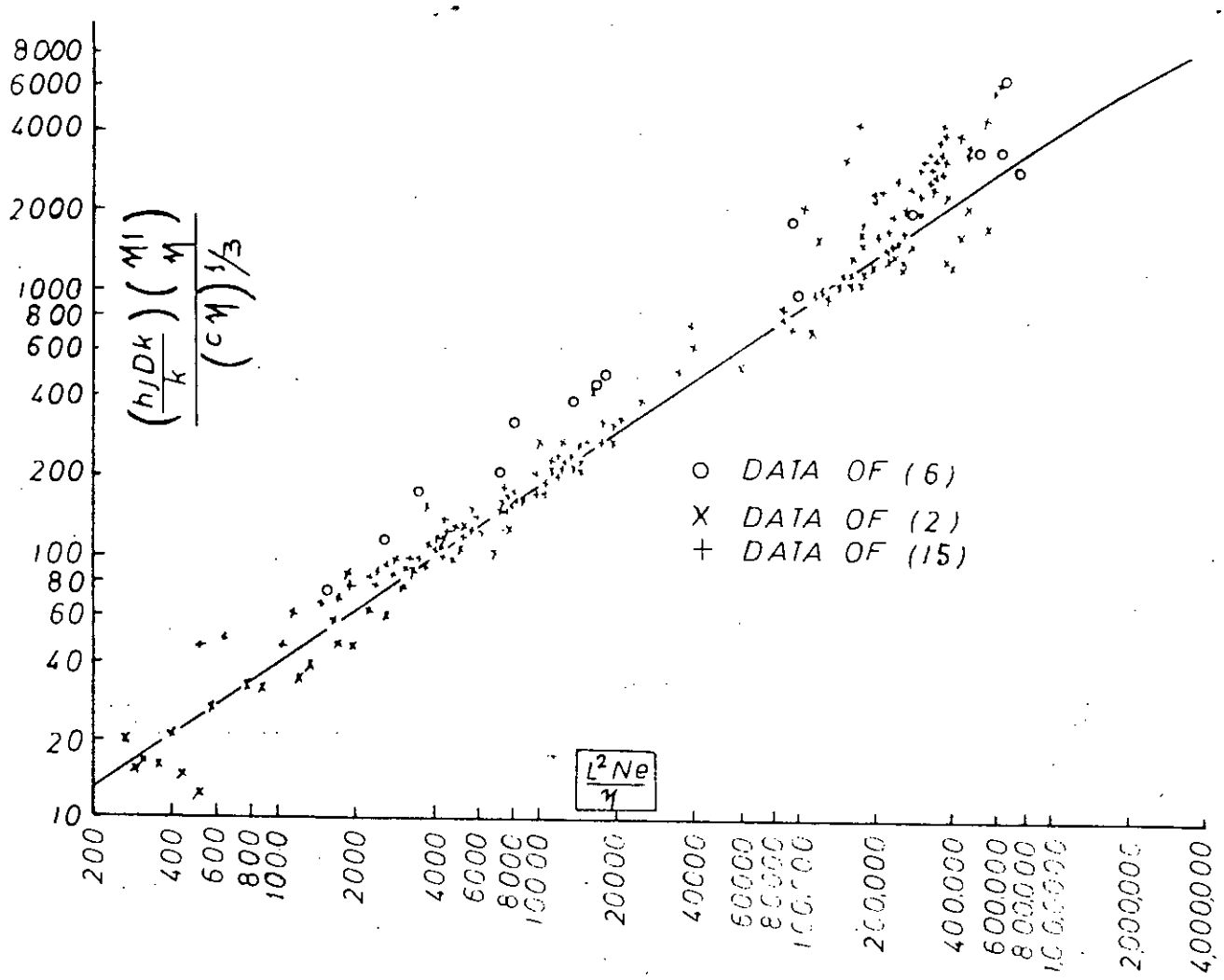

FINAL CORRELATION OF DATA OF OTHER AUTHORS.

6.0 DISCUSSION

This chapter discuss the results on an overall basis and compare them with previous work, wherever available.

6.1 Accuracy of Experimental Measurements

Adequate precautions were taken to minimize errors in the experimental measurements. Frequent checks were made to ensure the reproducibility of data. All the experimental runs were repeated and in general the results were reproducible within ± 10 percent.

6.2 Discussion

The experiment was conducted using eleven different liquids: water, 10 percent sugar solution, 15 percent sugar solution, 20 percent sugar solution, skimmed milk (2.25% Fat) Soyabean oil, non skimmed milk (3.5% Fat), 2.25%, 3.5% 15% and 25% oil-water emulsions. Three different steam pressures were selected and for each pressure the Reynolds number was varied by varying the impeller speed. The pressure of the steam in the jacket was 41.37 kPa (guage), 68.95 kPa (guage) and 137.89 kPa (guage), and the corresponding temperatures were 100°C, 101°C and 103°C respectively. At each of these temperatures the revolution of the impeller was 75, 65, 55 and 45 r.p.m.

Figure (5.1) shows plots of the Reynolds dimensionless group for agitation (Re) against the Nusselt dimensionless group (Nu) for all the eleven liquids. Observation showed that the slopes of all the heating curves corresponding to 100°C, 101°C and 103°C were nearly the same. The rate of increase of Nusselt number with the increase of Reynolds number were found to be similar for all the experimental liquids. The results for water and skimmed milk were in agreement with the results of similar investigations (40). For the case of oil, oil-water emulsions and sugar solutions, related data were not available.

The cooling curve for water, sugar solutions and oil (Figure 5.1) lies below 100°C heating curve except for the case of milk, which lies above the 103°C heating curve (Figure 5.1). This indicates lower rate of heat transfer for cooling except for the case of milk. Most of the previous workers had carried out experiments of cooling by coils and obtained a lower heat transfer coefficients for the cooling mode compared to the heating mode under similar conditions. However results of cooling by circulating water in the jacket are few in number, Poste (40) and Huggins (41) reported lower heat transfer coefficients for cooling where water was circulated in the jacket for cooling as in this experiments. The higher values for milk may be due to the complex behavior of emulsions of which milk is an example or it may due to the effect of agitation on heat transfer by free convection for this condition.

From the above observations it is clear that Nusselt dimensionless group exerts an influence on the surface heat transfer coefficient of both Reynolds number of the liquid (or agitator speed) and temperature (or pressure) of the steam in the jacket.

The effect of agitator speed on the film coefficients have been shown in Figure (5.2). It was expected that higher agitation speeds should produce higher coefficients and this was found to be true in every case. Chilton et. al. (2) and Cummings and West (10) found that after an initial increase at lower speeds the rate of increase of film coefficient gradually reduces with the increase in r.p.m., and as the r.p.m. increases further higher than 300 r.p.m. the film coefficient gradually decreases. In the present case the study was done with anchor agitator which operates in the lower r.p.m. range. So the data obtained in the low r.p.m. range are insufficient to support any general conclusions about the effect of agitator speed on film coefficient at higher speeds.

In correlating the data, the same general procedure suggested by Chilton et al. (2) and Uhl (4), have been employed. The Nusselt, Prandtl, and Reynolds numbers for each experimental condition were calculated and the values were shown on Tables (5.1 - 5.11). The kettle diameter (inside) have been selected as the proper value of D in the Nusselt group. The Reynolds number shown is the usual dimensionless group for agitation, $(PL^2N)/\mu$. A plot of $Nu/(Pr)^{\frac{1}{3}}$ versus Re gives a fairly good

straight line. However, to obtain a more general correlation, an additional correlation factor have been chosen by including a viscosity factor $(\mu w/\mu)^{-0.14}$, as employed by many authors (Table - 2.1). By adopting this procedure, a fairly good correlation has been obtained. The value ⅓ as the exponent of the Prandtl group and-0.14 as the exponent of viscocity ratio have been chosen through literature survey. Almost all the authors have reported ⅓ and-0.14 as the exponent of the Prandtl group and viscocity ratio respectively. Therefore a general correlation of the following form have been adopted,

$$Nu = A1\ (Re)^{A2}\ (Pr)^{\frac{1}{3}}\ \left(\frac{\mu w}{\mu}\right)^{-.14} \qquad (6.1)$$

The values of A1, A2 are obtained by regression analysis using digital computer IBM 370 both for heating and cooling runs of the individual liquids and also for different combination shown in table - 5.2 The computer programe is given in Appendix-E.

The correlating equation for the heating runs for the sugar solutions is

$$Nu = 0.0446\ (Re)^{.6578}\ (Pr)^{\frac{1}{3}}\ \left(\frac{\mu w}{\mu}\right)^{-.14} \qquad 6.2$$

For oil-water emulsions the resulting correlating equation for the heating run is

$$Nu = 0.0439\ (Re)^{.6795}\ (Pr)^{\frac{1}{3}}\ \left(\frac{\mu w}{\mu}\right)^{-.14} \qquad 6.3$$

and for all the heating data except oil, the resulting correlating equation is

$$Nu = .0496\ (Re)^{.6632}\ (Pr)^{\frac{1}{3}}\ \left(\frac{\mu w}{\mu}\right)^{-.14} \qquad 6.4$$

Figure (5.4) shows plot for the equation (6.4) and Figure (5.5) shows plots for different authors. Unusual values of A1 and A2 have been obtained when values of the runs with oil are included in the analysis. These unsual values may be due to the high prandtl number of the oil. For this reason the values of the oil runs were not considered in the general correlation.

The heat transfer factor J versus Re have been plotted for heating and cooling for the all the liquids and shown in Figure (5.3) and the general correlation have been plotted in Figure (5.4). Considering all the factors discussed above the important points which emerge from the experimental studies are as follows:

(a) The value of A1 obtained in this work is .046 on an average. Since the value of A1 depends on the geometry of the system (42, 43, 24, 44), comparison with other investigators are difficult. In a few investigations (45, 13, 46, 47, 48, 49, 50) the effects upon heat transfer of variations in geometrical dimensions have been presented. However, there is very little agreement on the influence of dimensions.

(b) The geometrical factor A1 is subject to considerable uncertainity, but there is much more agreement on the values of the exponent of Reynolds number (A2), Prandtl number and viscosity ratio. The majority of investigators have been able to correlate their data using a Reynolds number exponent (A2) of about 2/3 i.e. 0.667 (Table - 2.1) but a few workers (51, 52, 24, 20, 53, 54, 55) have reported values of about 0.5. It may be mentioned that the value (0.5) were found only in the case of coil heat transfer using paddle agitation. Appleton and Brennan (56) reported that the exponent of Reynolds number (A2) is dependent upon the fluid viscosity. However this was not substantiated by any other worker.

The value of A2 obtained in this work by regression analysis is .658, .679, and .663, which is very close to the value 0.667 obtained by other authors (17, 2, 52, 15, 6, 57, 58, 45, 25, 4). The slope of the Nusselt number versus Reynolds number curve also gives similar values for the exponent of the Reynolds number. The average value of the slope is 0.604, which is in fair agreement to the value of A2 obtained by regression analysis.

(c) In the case of Prandtl number exponent, the value of ⅓ has been used successfully by many authors over a wide range of Prandtl numbers. Only a few investigators (17, 51, 15, 49, 57) have been obtained only where the system geometry, impeller, range of Prandtl number and correlating variables are very much different from this experiment. Therefore it was considered reasonable to chose ⅓ as the exponent of Prandtl number for the present case.

(d) The exponent of the viscosity ratio, have been presented as-.14. Since in this work the viscosity ratio is close to unity, a large variation in the exponent of the viscosity ratio is negligible. Usually this value ranges from-0.14 to-0.4 (Table - 2.1) except in one study (6) in which the value was found to range from-0.97 to-0.18 depending upon the viscosity of the process liquid.

The standard deviation of the general correlation have been found to be 11 percent for sugar solutions, 18 percent for oil-water emulsions and 20 percent for all heating data except, oil. Since similar works using anchor agitator are very few in number, comparison is difficult. It should be mentioned here that the standard deviation obtained by other authors (34, 59 , 60) varied from 20 to 30 percent. Martone, J.A. and Sandal, O.C., (59) compared standard deviation for anchor and turbine type of agitators for the same system and found that the standard deviation for the case of anchor agitator is higher compared to other type of agitators.

68115

7.0 CONCLUSIONS AND SUGGESTIONS FOR FURTHER WORK

7.1 Conclusions

The conclusions of the present investigation on heat transfer to various liquids in a jacketed vessels may be as follows:

i) In the lower range of agitation (below 75 r.p.m.), heat transfer coefficients of the liquids increases with the increase in agitation for both heating and cooling processes.

ii) Heat transfer coefficient for cooling is in general less than the heat transfer coefficient fcr heating.

iii) The heat transfer coefficient of experimental liquid increases as the temperature of the heating medium increases.

iv) Results of the liquids with high Prandtl numbers (arround 250) cannot be correlated with the results of the liquids with low Prandtl numbers (around 6).

v) The following correlations have been developed, which successfully predict heat transfer coefficients and may be used for design purposes for similar type of heating vessels:

a) for sugar solutions

$$Nu = 0.0446 \ (Re)^{0.6578} \ (Pr)^{\frac{1}{3}} \ \left(\frac{\mu_w}{\mu}\right)^{-0.14}$$

b) for oil-water emulsions

$$Nu = 0.0439\ (Re)^{0.6795}\ (Pr)^{\frac{1}{3}}\ \left(\frac{\mu_w}{\mu}\right)^{-0.14}$$

c) for all the heating runs except oil (high prandtl number compared to other liquids)

$$Nu = 0.0496\ (Re)^{0.6632}\ (Pr)^{\frac{1}{3}}\ \left(\frac{\mu_w}{\mu}\right)^{-0.14}$$

7.2 Suggestions for future work

(i) Study of jacketed heat transfer in the present experimental set-up can be extended by using cooling coils inside the vessel for steady state operations.

(ii) Non-Newtonian and pseudo plastic fluids may be used for similar experiments to study their heat transfer behaviour.

(iii) Heat transfer studies can be carried out for similar fluids by varying the geometrical factors of the vessel (e.g. diameter of the vessel, height of the vessel, shape of the vessel, etc.)

iv) The effect of different type of impellers on heat transfer and power consumption may be studied for the experimental liquids used in the present work.

NOMENCLATURE

Symbols and abbreviations used in this thesis are defined in this chapter. The units have been mentioned wherever applicable.

Symbol	Significance	Unit
a	An exponent	(-)
A1,A2,A3	Regression Constant	(-)
A_i	Inside liquid film area	m^2
A_m	Mean area of a vessel wall equal to $(A_{wo} + A_{wi})/2$	m^2
A_s	Area of outside fouling film	m^2
A_{wi}	Area of the inside wall of a mixing vessel	m^2
A_{wo}	Area of the outside wall of the mixing vessel	m^2
b	an exponent	(-)
c	an exponent	(-)
C	overall constant	(-)
C_a	Wall clearance of an asitator	(m)
C_p	Specific heat of liquid	(kJ/kg.k)
C'_p	Specific heat of water	or, (kWs/kg.K)
D_i	Impeller agitator diameter	(m)
D_T, D	Inside tank diameter	(m)
dt	Time increment	(hr)
dT_b	Bulk-liquid temperature increment	(^oC)

Symbol	Significance	Unit
E_c, E_i	Constant in correlation for coil & jackets	(-) (-)
Fr	Froude number (N^2D/g)	(-)
g	Gravitational constant,	(m/hr^2)
h_{fo}	Outside fouling-film heat transfer coefficient	($kw/m^2.K$) or, ($kJ/m^2.s.^oK$)
h_{fi}	Inside fouling-film heat transfer coefficient	($kw/m^2\ ^oK$)
h_j	Coefficient of heat transfer, kettle liquid to Jacket wall	($kW/m^2\ oK$)
h_s	Heat transfer film coefficient of the condensed steam	($kW/m^2.K$)
J	Heat Transfer factor	(-)
k	Thermal conductivity	($W/m.K$)
K	an overall constant	(-)
L	Impeller blade length	(m)
M	Weight of the bulk liquid in the mixing vessel	(kg)
N	Agitator speed	(rev/hr)
n	Agitator Speed	(r.p.m)
Nu	Nusselt number (hiDT/k)	(-)
Nu_c, Nu_j	Nusselt number for coil, and jacket	(-)
Pr	Prandtl number ($C_p\mu/k$)	(-)
Q	Heat flow rate	(kJ/hr)
Re	Reynolds number ($\rho NDi^2/\mu$)	(-)
t	Time	(hr)
T_b	Bulk liquid temperature	(^oC)
T_f	Final bulk-liquid temperature	(^oC)

Symbol	Significance	Unit
T_{fo}	Outside film temperature	(^{o}C)
T_c	Cooling water temperature	(^{o}C)
T_i	Initial bulk-liquid temperature	(^{o}C)
T_s	Steam temperature	(^{o}C)
T_{wi}	Inside wall temperature	(^{o}C)
T_{wo}	Outside wall temperature	(^{o}C)
u_i	Overall heat-transfer coefficient based on the inside film area	($kW/m^2.K$)
Vis	Viscocity ratio $= \mu_w/\mu$	(-)
w	Cooling water flowrate	(kg/s)
x	Tank wall thickness	(m)
μ	liquid viscosity	(Pa.S) or, ($N.S/m^2$) or, Kg/m.s.
μ_w	Viscosity of the inside liquid wall-film	(Pa.s)
μ_b	Bulk liquid viscosity	(Pa.S)
	Liquid density	(kg/m^3
θ	time	(min)
ϕ	Intercept for the Wilson plot	(m^2K/kW)

Abbreviation

m	meter
cm	centimeter
J	Joules
kJ	kilo Joules
gm	gram
kg	kilogram
hr	hour
s	second
kW	kilowatt
W	Watt.
^{o}C	degree celceus
^{o}K,K	degree kelvin
rev	revolution
r.p.m	revolution per minute
Pa	Pascal
N	Newton

REFERENCES

1. Penny, W.R. Chem.Engng, Albany, 1971, 80, March 22, p.86.
2. Chilton, T.H., Drew, T.B., and Jebens, R.H., Ind. Engng. Chem., 1944, 36, 510.
3. Kern, D.Q., "Process Heat Transfer", McGraw-Hill, New York, 1950.
4. Pierce, D.E., and Terry, P.B., Chem. Met. Eng., 1924 30, 872.
5. Rhodes, F.H., Ind. Eng. Chem., 1934, 26, 944.
6. Cummings, G.H., and West, A.S. Ind. Engng. Chem., 1950, 40, 2303.
7. Ruston, J.H., Lichtman, R.S., and Mahoney, L.H., Ind. Eng. Chem., 1948, 40, 1082.
8. Kraussold, H., Chem - Ing - Tech., 1951, 23, 177.
9. Uhl, V.W., Chem. Engng Prog., Symp. Ser., 1955, 51, No. 17, p.93.
10. Pursell, H.P., M.Sc.Thesis, 1954, Newark College of Engineering, New Jersey.
11. Sieder, E.N., and Tate, G.E. Ind. Engng. Chem., 1936, 28, 1429.
12. Carroll, C.V., M.Sc. Thesis, 1952, Newark College of Engineering, New Jersey.
13. Brown, R.W., Scott, R., and Joyne, C., Trans. Inst. Chem. Engrs., 1947, 25, 181.
14. Uhl, V.W., Ph.D. Thesis, hehigh University, Bethlehem, Pennsylvania, 1952.

15. Gordon, M., M.Sc. Thesis, 1941, University of Minnesota, Minneapolis.

16. Brooks, G., and Su, G.J. Chem. Engng. Prog., 1959, 55, 54.

17. Dunlop. I.R., and Rushton, J.H. Chem. Engng. Prog. Symp. Scr., 1953, 49, No. 5, p.137.

18. Oldshue, J.Y. and Gretton, A.T., Chem. Eng. Progr., Dec. 1954, 50, p.615.

19. Pratt, N.H., Trans Instn. Chem. Engrs, 1947, 25, 163.

20. Hixon, A.W., and Baum, S.J., Ind. Eng. Chem. 1941, 33, 1433.

21. Pramuk, F.S., and West water, J.W., Chem. Eng. Progr. 52, Symposium Ser. No. 18, 79 (1956).

22. Metzner, A.B., and Taylor, J.S., AiChE. Journal, 1960, 6, 109.

23. Uhl, V.W., and Voznik, H.P. Chem. Engng. Prog., March 1960, 56, p.72.

24. Uhl, V.W., and Gray, J.B., edited by "Mixing" Vol-1, Academic Press, Inc. (London) Ltd. N.Y. 1966.

25. Huggins, R.E., Ind. Eng. Chem., 1931, 23, 749.

26. Houlton, H.G., Ind. Eng. Chem., 1944, 36, 522.

27. Skelland, A.H.P., Chem. Eng. Sci., 1958, 7, 166.

28. Yarham, O.L., "Selection of Grease Plant Equipment for successful operation", Paper presented at the National Lubricating Grease Institute, San Francisco, California, October, 1954.

29. Chapman, F.S., and Holland, F.A., Heat transfer correlations for Agitated Liquids in Process Vessels, Chemical Engineering, Jan 18, 1965.

30. Wilson, E.E., Trans ASME, 1915, 37, 47.

31. Strek. F., Int. Chem.Eng.; 1963, 3, 533.

32. Mizushina, T., R. Jto, Y. Murakani and M. Kiri, Kagaku Kogaku, 1966, 30, 719.

33. N. Mitsuishi, Y. Miyairi, T. Katamine, Heat transfer to Newtonian liquids in an agitated vessel, Journal of Chemical Engineering of Japan, 1973, Vol-6, No.5, p.409-414.

34. Konno, H., K.Okada, K.Sasabayashi and S.Otani; Kagaku Kogaku, 1967, 31, 872.

35. Sandall, O.C., and Patel, K.G., Heat transfer to non-Newtonian Pseudoplastic fluids in agitated vessels, Ind. Eng. Chem. Process Des. Develop., Jan. 1970, Vol. 9, No. 1, p.139.

36. Davis, J.G., A dictonary of Dairying, 2nd edi, Leonard Hill Limited, London, 1955.

37. George P. Meade, Cane Sugar Hand Book, 9th edi., John Wiley and Sons, Inc., New York, 1963.

38. Perry, J.H., Chemical Engineers Handbook, 4th edition, McGraw Hill Book Co., 1963.

39. Eckey, E.W., and Lawrence P. Miller, Vegitable Fats and oils, Reinhold Publishing Corporation, New York, 1954.

40 Poste, Ind. Eng. Chem., 16, 469 (1924).

41. Huggins, Ind. Eng. Chem., 23, 749-753(1931).

42. Sterbacek, Z., and Tausk, P. "Mixing in the Chemical Industry", 1965. (Oxford: Perga8on Press).

43. Moo-Young, M., and Cross, J.V. Canad. J. Chem. Engng, 1969, 47, 369.

44. Penny, W.R., and Bell, K.J. Ind. Engng Chem., 1967, 59, No. 4, p.40.

45. Mizushina, T., Ito, R., Murakami, Y., and Kiri, M.; Kagaku Kogaku, 1967,5, 43.

46. Aske, H., Beck, W.J., Van Berkel, F.C.A.A., and DeGraauw, J. Chem. Engng Sci., 1967, 22, 135.

47. Chapman, F.S., Dallenbach, H., and Holland, F.A. Trans. Instn Chem. Engrs, 1964, 42, T398.

48. Shah, P.V., and Rao, M.R. Indian Journal of Technology, 1969, 7, 166.

49. Frantisak, F., Smith, J.W., and Dohnal, J. Ind. Engng Chem. Proc. Des. Dev., 1968, 7, 188.

50. Strek, F., Masiuk, S., Gawor, G., and Jagiello, R. Int. Chem. Engng, 1965, 5, 695.

51. Kapustin, A.S. International Chemical Engineering, 1963, 3, 514.

52. Askew, W.S., and Beckmanon, R.B. Ind. Engng. Chem. Proc. Des. Dev., 1965, 4, 311.

53. Lavingia, P.J., and Dickson, P.F. Ind. Engng. Chem., Proc. Des. Dev., 1971, 10, 206.

54. Mizushina, T., Ito, R., Murakami, Y., and Kiri, M. Kagaku Kogaku, 1967, 5, 93.

55. Skelland, A.H.P., and Dalrowski, J.W. Birm. Univ. Chem Engr., 1963, 14, No. 3, p.82.

56. Appleton, W.T., and Brennan, W.C. Canada. J. Chem. Engng, 1966, 44, 276.

57. Skell and, A.H.P., Blake, W.K., Dabrowski, J.W., Ulrich, J.A., and Mach, T.F. A.I.Ch.E. Jl., 1965, II, 951.

58. Pollard, J., and Kantyka, T.A. Trans. Instn Chem. Engrs. 1969, 47, T21.

59. Martone, J.A., and Sandall, O.C., Heat transfer to Bingham Plastic Slurries in Agitated Vessels, Ind. Eng. Chem. Process Des. Develop., Vol. 10, No.1, 1971.

60. Pandey, D.K., Prakash, OM., and Gupta, S.N., Differential Viscocity Correlation for Heat Transfer to Non-Newtonian Fluids in a Jacketed Agitated Vessels, Indian Journal of Technology, Vo. 15, June 1977, pp.223-228.

61. Skelland, A.H.P., Ulrich, J.A., and Mach, T.F. Chem. Engng. Symp. Ser., 1965, 61, No. 57, p.97.

62. Pollard, J., and Kantyka, T.A. Trans. Instn Chem. Engrs, 1969, 47, T21.

63. Coyle, C.K., Hirschland, H.E., Michel, B.J., and oldshue, J.Y. Canad. J. Chem. Engng, 1970, 48.

APPENDIX - A

EXPERIMENTAL DATA

Inside diameter of the kettle, D_i = 0.3932 meter

Impeller length, L = 0.3746 meter

Inside surface area of the kettle, A_i = 0.4255 square meter.

HEATING

Sl. No.	Experimental Liquid	Steam Pressure (guage) P(k pa)	Wt. of Liquid m(kg)	Heating time θ (min)	Impeller Rev. n(r.p.m)	Av. Initial bulk temp. t_1 (°C)	Av. final bulk temp. t_2 (°C)	Av. Wall temp. t_w (°C)
1.	WATER	41.37	31.751	20.0	75.0	30.50	80.80	61.20
2.					65.0	31.00	79.20	63.50
3.					55.0	30.00	76.50	64.50
4.					45.0	30.50	73.75	65.25
5.		68.95	31.751	20.0	75.0	31.00	83.40	62.75
6.					65.0	31.25	81.30	64.50
7.					55.0	32.00	79.75	66.01
8.					45.0	31.75	76.50	67.20
9.		137.89	31.751	18.0	75.0	30.50	85.60	65.25
10.					65.0	30.25	83.75	66.95
11.					55.0	30.20	81.40	68.50
12.					45.0	30.25	79.30	70.75

Sl. No.	Experimental Liquid	Steam pressure (guage) P (k Pa)	Wt. of Liquid m(kg)	Heating time θ (min)	Impeller Rev. n(r.p.m)	Av. Initial bulk temp. t_1 (°C)	Av. final bulk temp. t_2 (°C)	Av. Wall temp. t_w (°C)
13.	SUGAR (SOLN. (10%)	41.37	35.280	20.0	75.0	31.00	78.85	60.00
14.					65.0	31.50	76.77	60.50
15.					55.0	30.50	74.45	62.50
16.					45.0	31.50	71.44	64.00
17.		68.95	35.280	20.0	75.0	31.50	80.57	61.00
18.					65.0	31.75	78.50	63.50
19.					55.0	31.00	76.30	64.50
20.					45.0	31.00	73.25	65.20
21.		137.89	35.280	20.0	75.0	31.00	85.03	64.00
22.					65.0	31.00	83.40	65.50
23.					55.0	31.00	81.05	66.75
24.					45.0	31.00	78.10	68.00
25.	SUGAR SOLN. (15%)	41.37	37.353	20.0	75.0	31.00	74.70	57.00
26.					65.0	31.00	72.60	58.50
27.					55.0	31.00	69.80	59.50
28.					45.0	31.00	67.30	60.75
29.		68.95	37.353	20.0	75.0	31.00	77.20	59.00
30.					65.0	31.00	75.30	60.50
31.					55.0	31.00	73.30	62.30
32.					45.0	31.00	70.30	63.50

Sl. No.	Experimental Liquid	Steam pressure (guage) (P (k Pa)	Wt. of Liquid m(kg)	Heating time θ (min)	Impeller Rev. n(r.p.m.)	Av. Initial bulk temp. t_1 (°C)	Av. final bulk temp. t_2 (°C)	Av. Wall temp. t_w (°C)
33.		137.89	37.353	20.0	75.0	31.0	81.90	62.50
34.					65.0	31.0	80.00	63.50
35.					55.0	31.0	78.10	65.00
36.					45.0	31.0	74.80	66.50
37.	SUGAR SOLN. (20%)	41.37	39.689	20.0	75.0	31.00	72.60	56.20
38.					65.0	31.00	70.50	57.50
39.					55.0	31.00	68.30	58.30
40.					45.0	31.00	65.60	59.50
41.		68.95	39.689	20.0	75.0	31.00	74.70	58.50
42.					65.0	31.00	72.80	60.00
43.					55.0	31.00	70.60	61.30
44.					45.0	31.00	67.60	62.50
45.		137.89	39.689	20.0	75.0	31.00	79.50	60.50
46.					65.0	31.00	77.70	62.00
47.					55.0	31.00	75.30	62.80
48.					45.0	31.00	72.30	64.50
49.	MILK (SKIMMED)	41.37	32.659	15.0	75.0	32.00	77.50	60.00
50.					65.0	32.00	75.90	61.00
51.					55.0	32.00	73.50	62.50
52.					45.0	32.00	70.90	63.25

Sl. No.	Experimental Liquid	Steam pressure (guage) P(k pa)	Wt. of Liquid m(kg)	Heating time θ (min)	Impeller Rev. n(r.p.m)	Av.Initial bulk temp. t_1(°C)	Av.final bulk temp. t_2(°C)	Av.Wall temp. t_w(°C)
53.		68.95	32.659	15.0	75.0	32.00	79.25	59.50
54.					65.0	32.00	77.60	60.50
55.					55.0	32.00	75.25	61.75
56.					45.0	32.00	72.75	63.50
57.		137.89	32.659	15.0	75.0	32.00	83.40	61.50
58.					65.0	32.00	81.90	63.40
59.					55.0	32.00	79.50	65.50
60.					45.0	32.00	76.90	66.80
61.	OIL	41.37	20.803	15.0	75.0	32.00	87.30	63.50
62.					65.0	32.00	85.60	65.00
63.					55.0	32.00	83.40	66.50
64.					45.0	32.00	80.40	67.80
65.		68.95	28.803	14.0	75.0	32.00	88.40	65.00
66.					65.0	32.00	86.50	66.70
67.					55.0	32.00	84.30	68.50
68.					45.0	32.00	81.30	70.20
69.		137.89	28.803	10.0	75.0	30.00	85.80	63.80
70.					65.0	30.00	83.50	65.00
71.					55.0	30.00	81.40	66.40
72.					45.0	30.00	78.20	68.20

Sl. No.	Experimental Liquid	Steam pressure (guage) P(k Pa)	Wt. of Liquid m(kg)	Heating time θ (min)	Impeller Rev. n(r.p.m)	Av.Initial bulk temp. t_1 (°C)	Av. final bulk temp. t_2 (°C)	Av.wall temp. t_w (°C)
73.	OIL-WATER EMMULSION (2.25% OIL)	41.37	31.751	15.0	75.0	32.00	68.44	54.30
74.					65.0	32.00	67.26	55.85
75.					55.0	32.00	64.74	57.20
76.					45.0	32.00	62.00	58.10
77.		68.95	31.751	15.0	75.0	32.00	72.20	56.30
78.					65.0	32.00	70.00	57.20
79.					55.0	32.00	68.00	58.85
80.					45.0	32.00	64.94	59.50
81.		137.89	31.751	15.0	75.0	32.00	78.84	59.20
82.					65.0	32.00	76.90	60.21
83.					55.0	32.00	74.42	61.80
84.					45.0	32.00	72.14	63.00
85.	OIL-WATER EMMULSION (3.5% OIL)	41.37	31.751	12.0	75.0	31.00	66.92	53.05
86.					65.0	31.00	65.16	54.20
87.					55.0	31.00	63.54	56.40
88.					45.0	31.00	61.10	57.60
89.		68.95	31.751	12.0	75.0	31.00	69.96	54.60
90.					65.0	31.00	67.24	55.20
91.					55.0	31.00	65.68	57.60
92.					45.0	31.00	63.06	58.80

Sl. No.	Experimental Liquid	Steam pressure (guage) P(k pa)	Wt. of Liquid m(kg)	Heating time θ (min)	Impeller Rev. n(r.p.m)	Av.Initial bulk temp. t_1 (°C)	Av. final bulk temp. t_2 (°C)	Av.wall temp. t_w (°C)
93.		137.89	31.751	12.0	75.0	31.00	74.24	56.40
94.					65.0	31.00	72.32	57.80
95.					55.0	31.00	69.86	59.60
96.					45.0	31.00	67.64	60.80
97.	OIL-WATER EMMULSION (15% OIL)	41.37	31.298	15.0	75.0	31.00	72.54	55.80
98.					65.0	31.00	71.08	57.20
99.					55.0	31.00	69.00	59.00
100.					45.0	31.00	66.16	59.80
101.		68.95	31.298	15.0	75.0	31.00	76.34	57.60
102.					65.0	31.00	73.16	58.20
103.					55.0	31.00	71.70	60.40
104.					45.0	31.00	68.44	60.80
105.		137.89	31.298	15.0	75.0	31.00	81.14	60.00
106.					65.0	31.00	79.16	61.20
107.					55.0	31.00	77.02	63.00
108.					45.0	31.00	74.66	63.80
109.	OIL-WATER EMMULSION (25% OIL)	41.37	31.071	15.0	75.0	30.00	74.28	56.20
110.					65.0	30.00	72.74	57.40
111.					55.0	30.00	70.56	59.00
112.					45.0	30.00	67.60	59.80

Sl. No.	Experimental Liquid	Steam pressure (guage) P(k Pa)	Wt. of Liquid m(kg)	Heating time θ (min)	Impeller Rev. n(r.p.m)	Av.Initial bulk temp. t_1 (°C)	Av.final bulk temp. t_2 (°C)	Av.wall temp. t_w (°C)
113.		68.95	31.071	15.0	75.0	30.00	77.30	57.60
114.					65.0	30.00	74.90	58.40
115.					55.0	30.00	73.36	60.60
116.					45.0	30.00	69.98	61.20
117.		137.89	31.071	15.0	75.0	31.00	81.90	60.40
118.					65.0	31.00	79.88	61.80
119.					55.0	31.00	77.64	63.00
120.					45.0	31.00	75.18	63.80
121.	MILK (NON-SKIMMED)	41.37	32.659	12.0	75.0	30.00	70.68	54.20
122.					65.0	30.00	68.66	55.40
123.					55.0	30.00	66.48	57.20
124.					45.0	30.00	64.16	58.00
125.		68.95	32.659	12.0	75.0	30.00	72.44	55.20
126.					65.0	30.00	70.86	56.40
127.					55.0	30.00	67.90	58.00
128.					45.0	30.00	65.14	58.80
129.		137.89	32.659	12.0	75.0	30.00	76.26	57.20
130.					65.0	30.00	75.16	58.60
131.					55.0	30.00	72.00	60.20
132.					45.0	30.00	69.86	61.30

COOLING

Sl. No.	Experimental Liquid	Wt. of Liquid m(kg)	Cooling time θ (min)	Impeller Rev. n(r.p.m)	Cooling water flow-rate w(kg/m^3)	Av. Initial bulk temp. t_1 (°C)	Av.Final bulk Temp. t_2 (°C)	Av. wall temp. t_w (°C)
1	WATER	31.751	25.0	75.0	1.3381	52.00	35.76	40.00
2				65.0	1.3245	53.50	36.88	39.50
3				55.0	1.4061	52.50	36.73	39.25
4				45.0	1.3109	55.00	39.00	39.00
5	SUGAR SOLN. (10%)	35.280	30.0	75.0	1.2889	58.00	41.86	46.25
6				65.0	1.3275	58.50	42.30	46.00
7				55.0	1.3215	60.00	43.64	45.50
8				45.0	1.2950	58.50	43.50	45.25
9	SUGAR SOLN. (15%)	37.353	30.0	75.0	1.3048	60.00	43.45	48.00
10				65.0	1.2988	60.50	44.18	47.75
11				55.0	1.3026	60.00	44.46	47.25
12				45.0	1.3048	59.00	44.73	46.75
13	SUGAR SOLN. (20%)	39.689	30.00	75.0	1.3060	59.50	44.00	48.00
14				65.0	1.3275	60.00	44.58	47.50
15				55.0	1.3094	60.00	45.26	46.00
16				45.0	1.3192	60.50	46.14	45.00
17	MILK (SKIMMED)	32.659	30.00	75.0	1.2890	60.50	37.83	45.50
18				65.0	1.3026	59.00	37.48	45.00
19				55.0	1.2920	60.00	38.18	44.00
20				45.0	1.2942	60.00	38.57	43.50

Sl. No.	Experimental Liquid	Wt. of Liquid m(kg)	Cooling time θ (min)	Impeller Rev. n(r.p.m)	Cooling water flowrate w(kg/m^3)	Av.Initial bulk temp. t_1 (°C)	Av.Final bulk Temp. t_2 (°C)	Av.wall temp. t_w (°C)
21	OIL	28.803	30.0	75.0	1.2988	61.00	33.08	41.00.
22				65.0	1.3109	60.50	33.47	40.00
23				55.0	1.3041	60.50	34.10	38.50
24				45.0	1.3116	60.00	34.83	38.00
25	OIL-WATER EMMULSION (2.25% OIL)	31.751	20.0	75.0	1.3048	55.00	39.82	43.40
26				65.0	1.3026	55.00	40.27	42.80
27				55.0	1.2988	55.00	40.55	41.60
28				45.0	1.3094	55.00	41.15	41.20
29	OIL-WATER EMMULSION (3.5% OIL)	31.751	20.0	75.0	1.3245	55.00	40.08	43.40
30				65.0	1.3109	55.00	40.48	42.60
31				55.0	1.3215	55.00	40.82	41.80
32				45.0	1.3275	55.00	41.42	41.00
33	OIL-WATER EMMULSION (15% OIL)	31.298	20.0	75.0	1.3199	55.00	39.28	43.20
34				65.0	1.3124	55.00	39.64	42.60
35				55.0	1.3320	55.00	40.18	41.60
36				45.0	1.3169	55.00	40.81	40.80
37	OIL-WATER EMMULSION (25% OIL)	31.071	20.0	75.0	1.3063	55.00	39.30	43.40
38				65.0	1.2973	55.00	39.73	42.60
39				55.0	1.3094	55.00	40.29	41.60
40				45.0	1.2950	55.00	41.23	41.20
41	MILK (NON-SKIMMED)	32.659	20.00	75.0	1.2889	55.00	39.25	43.20
42				65.0	1.3026	55.00	39.79	42.60
43				55.0	1.2912	55.00	40.31	41.60
44				45.0	1.2973	55.00	40.84	40.80

APPENDIX-B

PROPERTIES OF LIQUIDS

HEATING

Sl. No.	Experimental Liquid	av. bulk temp. tav (^oC)	av. wall temp. t_w (^oC)	Density at av. bulk temp. ρ (kg/m^3)	Viscocity at bulk temp. μ (Pa.S) ($X10^{-4}$)	Viscocity at wall temp. μ_w (Pa.S) ($X10^{-4}$)	Specific heat C_p (kJ/kgK)	Thermal conductivity k(w/m. ^oK)
1	WATER	55.65	61.20	985.456	5.0019	4.6009	4.1847	0.6438
2		55.10	63.50	985.776	5.0597	4.4438		
3		53.25	64.50	986.577	5.2003	4.3901		
4		52.12	65.25	987.057	5.3119	4.3281		
5		57.20	62.75	984.735	4.9027	4.4976		
6		56.27	64.50	985.231	4.9729	4.3901		
7		55.87	66.01	985.632	5.0019	4.2909		
8		54.12	67.20	986.224	5.1424	4.2330		
9		58.05	65.25	984.174	4.8324	4.3405		
10		57.00	66.95	984.815	4.9068	4.2330		
11		55.80	68.50	985.456	5.0019	4.1462		
12		54.78	70.75	985.936	5.0804	4.0428		
13	SUGAR SOLN. (10%)	54.92	60.00	1033.191	6.9944	6.3991	3.9473	0.6404
14		53.13	60.50	1033.992	7.1638	6.3495		
15		52.47	62.50	1034.472	7.2300	6.1511		
16		51.47	64.00	1025.021	7.3333	6.0064		

Sl. No.	Experimental Liquid	av. bulk temp. tav (°C)	av. wall temp. t_w (°C)	Density at av. bulk temp. ρ(kg/m^3)	Viscocity at bulk temp. μ(Pa.S) (X10^{-4})	Viscocity at wall temp. μ_w(Pa.S) (X10^{-4})	Specific heat C_p(kJ/kgK)	Thermal conductivity k(w/m.K)
17		56.04	61.00	1032.550	6.8455	6.3040		
18		55.12	63.50	1033.030	6.9613	6.0519		
19		53.65	64.50	1033.831	7.1184	5.9568		
20		52.12	65.20	1034.472	7.2672	5.8782		
21		58.01	64.00	1031.589	6.6223	6.0023		
22		57.20	65.50	1032.069	6.7009	5.8534		
23		56.00	66.75	1032.710	6.8538	5.7253		
24		54.55	68.00	1033.511	7.0150	5.6054		
25.	SUGAR SOLN. (15%)	52.85	57.00	1045.877	8.1808	7.6558	3.9473	0.6404
26		51.80	58.50	1046.005	8.2676	7.4573		
27		50.40	59.50	1046.326	8.4329	7.3251		
28		49.15	60.75	1047.735	8.4908	7.1721		
29		54.10	59.00	1045.285	8.0278	7.3912		
30		53.15	60.50	1045.799	8.1270	7.2011		
31		52.15	62.30	1046.294	8.2262	6.9985		
32		50.65	63.50	1046.983	8.4040	6.8538		
33		56.45	62.50	1044.003	7.7219	6.9654		
34		55.50	63.50	1044.532	7.8542	6.8538		
35		54.55	65.00	1045.076	7.9741	6.6802		
36		52.90	66.50	1045.797	8.1477	6.5024		

Sl. No.	Experimental Liquid	av. bulk temp tav (^oC)	av. wall temp. t_w (^oC)	Density at av. bulk temp. ρ (kg/m^3)	Viscocity at bulk temp. μ(Pa.S) ($X10^{-4}$)	Viscocity at wall temp. μ_w (Pa.S) ($X10^{-4}$)	Specific heat C_p (kJ/kgK)	Thermal conductivity k(w/m.K)
37	SUGAR SOLN. (20%)	51.80	56.20	1077.802	9.4250	8.6809	3.9473	0.6404
38		50.75	57.50	1078.507	9.6111	8.4908		
39		49.65	58.30	1078.715	9.8053	8.3709		
40		48.30	59.50	1079.484	10.008	8.1890		
41.85		52.85	58.50	1077.305	9.2349	8.3420		
42		51.90	60.00	1077.738	9.3920	8.1146		
43		50.80	61.30	1078.379	9.5821	8.9451		
44		49.30	62.50	1079.051	9.8136	7.7839		
45.		55.25	60.50	1075.992	8.8339	8.0485		
46		54.35	62.00	1076.424	9.0034	7.8501		
47		53.15	62.80	1076.969	9.2018	7.7219		
48		51.65	64.50	1077.802	9.4622	7.5194		
49	MILK (SKIMMED)	54.75	60.00	1019.975	7.7426	7.1018	3.9775	0.6317
50		53.95	61.00	1020.328	7.8749	7.0026		
51		52.75	62.50	1020.985	8.0609	6.8538		
52		51.45	63.25	1021.577	8.2717	6.7753		
53		55.62	59.50	1019.479	7.6227	7.1638		
54		54.80	60.50	1019.975	7.7426	7.0522		
55		53.62	61.75	1020.472	7.9121	6.9282		
56		52.37	63.50	1021.177	8.1312	6.7505		

Sl. No.	Experimental Liquid	av. bulk temp. tav (°C)	av. wall temp. t_w (°C)	Density at av. bulk temp ρ (kg/m^3)	Viscocity at bulk temp. μ(Pa.S) (X10^{-4})	Viscocity at wall temp. μ_w (Pa.S) (X10^{-4})	Specific heat C_p (kJ/kgK)	Thermal conductivity k(w/m.K)
57		57.70	61.50	1018.390	7.3705	6.6930		
58		56.95	63.40	1018.774	7.4615	6.7505		
59		55.75	65.50	1019.415	7.6144	6.5520		
60		54.45	66.30	1020.088	7.7839	6.4735		
61	OIL	59.65	63.50	894.551	175.19	162.86		
62		58.80	65.00	895.127	177.91	158.06		
63		57.70	66.50	895.848	181.43	153.26		
64		56.20	67.80	896.841	186.23	149.10		
65		60.20	65.00	894.198	173.42	158.06		
66		59.25	66.70	894.823	176.47	152.62		
67		58.15	68.50	895.544	179.99	146.86		
68		56.25	70.20	896.537	184.79	141.41		
69		57.90	63.80	895.720	180.79	161.90		
70		56.75	65.00	896.473	184.47	158.06		
71		55.70	66.40	897.162	187.83	153.58		
72		54.10	68.20	898.219	192.95	147.82		
73	OIL-WATER EMMULSION (2.25% OIL)	50.22	54.30	985.978	5.9426	5.5531	4.1353	0.6324
74		49.63	55.85	986.253	6.0096	5.4179		
75		48.37	57.20	986.835	6.1218	5.3140		
76		47.00	58.10	987.467	6.2787	5.2248		

Sl. No.	Experimental Liquid	av. bulk temp. tav (^oC)	av. wall temp. t_w (^oC)	Density at av. bulk temp ρ (kg/m^3)	Viscocity at bulk temp. μ(Pa.S) (X10^{-4})	Viscocity at wall temp. μ_w (Pa.S) (X10^{-4})	Specific heat C_p (kJ/kgK)	Thermal conductivity k(w/m.K)
77		52.10	56.30	985.056	5.7548	5.3820		
78		51.00	57.20	985.590	5.8667	5.3144		
79		50.00	58.85	986.058	5.9649	5.1574		
80		48.47	59.50	986.786	6.1122	5.1122		
81		55.42	59.20	983.630	5.4496	5.1392		
82		54.45	60.21	984.034	5.5395	5.0668		
83		53.21	61.80	984.602	5.6430	4.9451		
84		52.07	63.00	985.056	5.7636	4.8551		
85	OIL-WATER EMMULSION (3.5% OIL)	48.96	53.05	985.458	6.3443	5.9145	4.1077	0.6260
86		48.08	54.20	985.910	6.4426	5.8199		
87		47.27	56.40	986.267	6.5221	5.6306		
88		46.05	57.60	986.836	6.6615	5.5266		
89		50.48	54.60	984.756	6.1946	5.7822		
90		49.12	55.20	985.458	6.3348	5.7255		
91		48.34	57.60	985.750	6.4192	5.5266		
92		47.03	58.80	986.386	6.5497	5.4057		
93		52.62	56.40	983.748	5.9609	5.6306		
94		51.66	57.80	984.156	6.0684	5.4990		
95		50.43	59.60	984.806	6.1946	5.2940		
96		49.32	60.80	985.295	6.3160	5.2531		

Sl. No.	Experimental Liquid	av. bulk temp. tav (^oC)	av. wall temp. t_w (^oC)	Density at av. bulk temp ρ(kg/m^3)	Viscocity at bulk temp. μ(Pa.S) (X10^{-4})	Viscocity at wall temp. μ_w(Pa.S) (X10^{-4})	Specific heat C_p(kJ/kgK)	Thermal conductivity k(w/m. K)
97	OIL-WATER EMMULSION (15% OIL)	51.77	55.80	974.064	9.1878	8.6013	3.8548	0.5677
98		51.04	57.20	974.461	9.3152	8.4287		
99		50.00	59.00	974.878	9.4669	8.1782		
100		48.58	59.80	975.636	9.6918	8.0732		
101		53.67	57.60	973.153	8.9030	8.3761		
102		52.08	58.20	973.899	9.1397	8.2889		
103		51.35	60.40	974.271	9.2554	7.9944		
104		49.72	60.80	975.092	9.5238	7.9547		
105		56.07	60.00	972.003	8.5659	8.0554		
106		55.08	61.20	972.590	8.6873	7.9226		
107		54.01	63.00	973.026	8.8328	7.6871		
108		52.83	63.80	973.582	9.0319	7.6183		
109	OIL-WATER EMMULSION (25% OIL)	52.14	56.20	965.148	13.137	12.275	3.6346	0.5170
110		51.37	57.40	965.533	13.298	12.061		
111		50.28	59.00	966.117	13.552	11.742		
112		48.80	59.80	966.854	13.875	11.593		
113		53.65	57.60	964.363	12.795	12.025		
114		52.45	58.40	964.944	13.055	11.855		
115		51.68	60.60	965.352	13.234	11.506		
116		49.99	61.20	966.233	13.600	10.919		

Sl. No.	Experimental Liquid	av. bulk temp. tav (^oC)	av wall temp. t_w (^oC)	Density at av. bulk temp ρ(kg/m^3)	Viscocity at bulk temp. μ(Pa.S) ($X10^{-4}$)	Viscocity at wall temp. μ_w (Pa.S) ($X10^{-4}$)	Specific heat C_p (kJ/kgK)	Thermal conductivity k(w/m. K)
117		56.45	60.40	962.942	12.262	11.472		
118		55.44	61.80	963.550	12.435	11.235		
119		54.32	63.00	964.083	12.680	11.023		
120		53.09	63.80	964.712	12.913	10.919		
121	MILK (NON-SKIMMED)	50.34	54.20	1022.14	8.3916	7.8253	3.9775	0.6317
122		49.33	55.40	1022.62	8.6313	7.6475		
123		48.24	57.20	1023.10	8.7554	7.4201		
124		47.08	58.00	1023.74	8.9621	7.3375		
125		51.22	55.20	1021.63	8.3089	7.6888		
126		50.43	56.40	1022.06	8.4329	7.5028		
127		48.95	58.00	1022.78	8.6809	7.3292		
128		47.57	58.80	1023.58	8.8670	7.2341		
129		53.13	57.20	1020.70	8.0113	7.4201		
130		52.58	58.60	1020.97	8.0857	7.2548		
131		51.00	60.20	1021.71	8.3337	7.0812		
132		49.93	61.30	1022.35	8.5156	6.9861		
			COOLING					
133	WATER	43.88	40.00	990.742	6.0973	6.5603	4.1847	0.6438
134		45.19	39.50	990.197	5.9692	6.6265		
135		44.61	39.25	990.437	6.0312	6.6554		
136		47.00	39.00	989.428	5.7832	6.6885		

Sl. No.	Experimental Liquid	av. bulk temp. tav (^oC)	av. wall temp. t_w (^oC)	Density at av. bulk temp. ρ (kg/m^3)	Viscocity at bulk temp. μ(Pa.S) ($X10^{-4}$)	Viscocity at wall temp. μ_w(Pa.S) ($X10^{-4}$)	Specific heat C_p (kJ/kgK)	Thermal conductivity k(w/m.K)
137	SUGAR SOLN. (10%)	49.93	46.25	1035.66	7.4904	7.8707	3.9473	0.6404
138		50.44	46.00	1035.42	7.4408	7.8955		
139		51.82	45.50	1034.76	7.2961	7.9493		
140		50.75	45.25	1035.27	7.4077	7.9741		
141	SUGAR SOLN. (15%)	51.72	48.00	1046.42	7.3085	7.6888	3.9473	0.6404
142		52.34	47.75	1046.12	7.2424	7.7178		
143		52.23	47.25	1046.18	7.2548	7.7674		
144		51.86	46.75	1046.36	7.2920	7.8211		
145	SUGAR SOLN. (20%)	51.75	48.00	1077.82	7.3044	7.6888	3.9473	0.6404
146		52.29	47.50	1077.55	7.2465	7.7426		
147		52.63	46.00	1077.37	7.2135	7.8955		
148		53.32	45.00	1077.02	7.1432	7.9989		
149	MILK	49.16	45.50	1022.73	8.6520	9.2225	3.9775	0.6317
150		48.24	45.00	1023.10	8.7843	9.3051		
151		49.09	44.00	1022.78	8.6727	9.5242		
152		49.28	43.50	1022.62	8.6231	9.6317		
153	OIL	47.04	41.00	902.880	215.55	234.89	1.9845	0.1367
154		46.98	40.00	902.928	215.75	238.09		
155		47.30	38.50	902.704	214.72	242.89		
156		47.42	38.00	902.624	214.34	244.49		

Sl. No.	Experimental Liquid	av. bulk temp. tav (^oC)	av. wall temp. t_w (^oC)	Density at av. bulk temp. ρ (kg/m^3)	Viscocity at bulk temp. μ(Pa.S) ($X10^{-4}$)	Viscocity at wall temp. μ_w (Pa.S) ($X10^{-4}$)	Specific heat C_p (kJ/kgK)	Thermal conductivity k(w/m.K)
157	OIL-WATER EMMULSION (2.25% OIL)	47.54	43.40	986.487	6.2114	6.6800	4.1353	0.6324
158		47.74	42.80	987.110	6.1889	6.7469		
159		47.91	41.60	987.061	6.1799	6.9030		
160		48.21	41.20	986.915	6.1443	6.9565		
161	OIL-WATER EMMULSION (3.5% OIL)	47.41	43.40	986.204	6.5221	6.9881	4.1077	0.6260
162		47.63	42.60	986.107	6.4895	7.0813		
163		47.77	41.80	986.027	6.4755	7.1975		
164		48.07	41.00	985.910	6.4518	7.3133		
165	OIL-WATER EMMULSION (15% OIL)	47.14	43.20	976.444	9.7833	10.613	3.8548	0.5677
166		47.32	42.60	976.242	9.8898	10.718		
167		47.59	41.60	976.141	9.8417	10.923		
168		47.90	40.80	976.008	9.8057	11.093		
169	OIL-WATER EMMULSION (25% OIL)	47.15	43.40	967.799	14.051	15.175	3.6343	0.5170
170		47.36	42.60	967.579	14.204	15.369		
171		47.64	41.60	967.475	14.136	15.656		
172		48.11	41.20	967.251	14.051	15.770		
173	MILK (NON-SKIMMED)	47.12	43.20	1023.66	8.9620	9.6731	3.9775	0.6317
174		47.39	42.60	1023.58	8.9083	9.7971		
175		47.65	41.60	1023.50	8.8670	10.004		
176		47.92	40.80	1023.26	8.8050	10.169		

APPENDIX - C

Sample Calculations

1. Heating of water at 4.37 kPa(guage) 6.0 psig , 100°C, 75 r.p.m.

Reference : Table - 5.1
Run - 1

(a) $$L.M.T.D = \frac{(T_s - T_i) - (T_s - T_f)}{\ln\{(T_s - T_i)/(T_s - T_f)\}}$$

$$= \frac{(100.00 - 30.50) - (100.00 - 80.80)}{\ln\{(100.00-30.50)/(100.00-80.80)\}}$$

$$= 39.10\ ^{\circ}C.$$

(b) $$\frac{MC_p}{\theta}(T_f - T_i) = U_i A_i (L.M.T.D)$$

$$Ui = \frac{MC_p}{\theta A_i}\left(\frac{T_f - T_i}{LMTD}\right)$$

$$= \frac{MC_p}{\theta A_i} \ln\left(\frac{T_s - T_i}{T_s - T_f}\right)$$

$$= \frac{31.7515 \times 4.1847}{20.00 \times 60.00 \times 0.4255} \ln\left(\frac{100.00-30.50}{100.00-80.80}\right)$$

$$= 0.33409\ kw/m^2.K$$

(c) $\emptyset$ = 0.60122 is the intercept of the straight line with the y-axis of the plot 1/Ui versus $(1/n)^{\frac{2}{3}}$. The value is obtained by least square method.

(d) $1/hj = \frac{1}{Ui} - \emptyset$

$$h_j = \frac{1}{1/U_i - \emptyset} = \frac{1}{\frac{1}{0.33409} - 0.60122}$$

$$= 0.41806 \quad kw/m^2.K$$

(e) $$Re = \frac{L^2.n.\rho}{\mu} = \frac{(0.3746)^2 \times (75.00/60.00) \times 985.456}{0.00050019}$$

$$= 345578$$

(f) $$Nu = \frac{h_j D_i}{k}$$

$$= \left(\frac{0.41806 \times 0.3932}{0.6438}\right) \times 100 = 255.314$$

(g) $$Pr = \frac{C_p \mu}{k}$$

$$= \left(\frac{4.1847 \times 0.00050019}{0.6438}\right) \times 1000 = 3.251$$

(h) $$Vis = \frac{\mu_w}{\mu} = \frac{4.6009 \times 10^{-4}}{5.0019 \times 10^{-4}} = 0.91984$$

(i) $$J = \frac{N_u}{(P_r)^{\frac{1}{3}} \cdot V_{is})^{A3}}$$

$$= \frac{255.314}{(3.251)^{\frac{1}{3}} \ (0.91984)^{0.097}} = 173.612$$

2. <u>Cooling of water, 75 r.p.m.</u>

Reference : Table - 5.1

Run - 1

(a) $$\ln\left(\frac{T_f - T_c}{T_i - T_c}\right) = \frac{wC'_p}{MC_p} \left(\frac{K-1}{K}\right) \theta$$

where $k = e^{Ui\,A_i/wC'_p}$

$$U_i = \frac{wC_p}{A_i} \ln\left[\frac{wC_p\,\theta}{wC'_p\,\theta - MC_p \ln\{(T_i - T_c)/(T_f - T_c)\}}\right]$$

$$= (0.022302 \times 4.1847/0.4255)$$
$$\times \ln\Big[0.022302 \times 4.1847 \times (25.0/60.0) \ /$$
$$0.022302 \times 4.1847 \times (25.0/60.0) - 31.7515$$
$$\times 4.1847 \ \ln \{(52.0 - 22.0)/(35.76 - 22.0)\}\Big]$$

$$= 0.29479 \quad kw/m^2.K.$$

(b) $\emptyset = 0.53087$

similarly as done in the heating run.

(c) $\frac{1}{h_j} = \frac{1}{Ui} - \phi$

$$h_j = \frac{1}{1/_{Ui} - \phi} = \frac{1}{1/0.33409 - 0.53087}$$

$$= 0.34949 \quad kw/m^2K.$$

(d) $Re = \frac{L^2 n \rho}{\mu} = \frac{(0.3746)^2 \times (75.0/60.0) \times 990.742}{6.0973 \times 10^{-4}}$

$$= 285012$$

(e) $Nu = \frac{h_j D_i}{k} = (\frac{0.34949 \times 0.3932}{0.6438}) \times 1000$

$$= 213.432$$

(f) $Pr = \frac{C_p \mu}{k} = (\frac{4.1847 \times 6.0973 \times 10^{-4}}{0.6438}) \times 1000$

$$= 3.963$$

(g) $Vis = \frac{\mu_w}{\mu} = \frac{6.5603 \times 10^{-4}}{6.0973 \times 10^{-4}} = 1.07593$

(h) $J = \frac{Nu}{(Pr)^{\frac{1}{3}} (Vis)^{A_3}} = \frac{213.432}{(3.963)^{\frac{1}{3}} (1.07593)^{0.0047}}$

$$= 134.700$$

Standard Deviation of the general Correlation $N_u = 0.064(R\ )$

$$Nu = 0.064(Re)^{0.634}(Pr)^{\frac{1}{3}}(Vis)^{0.056}$$

$$\text{Standard deviation} = \sqrt{\frac{1}{N}\sum_{i=1}^{N}\left(\frac{\text{Nu calculated} - \text{Nu expt.}}{\text{Nu calculated}}\right)^2} \times 100$$

$$= 17\%$$

where N = Total number of runs

APPENDIX — D

NU (CAL) VS NU (EXPT).

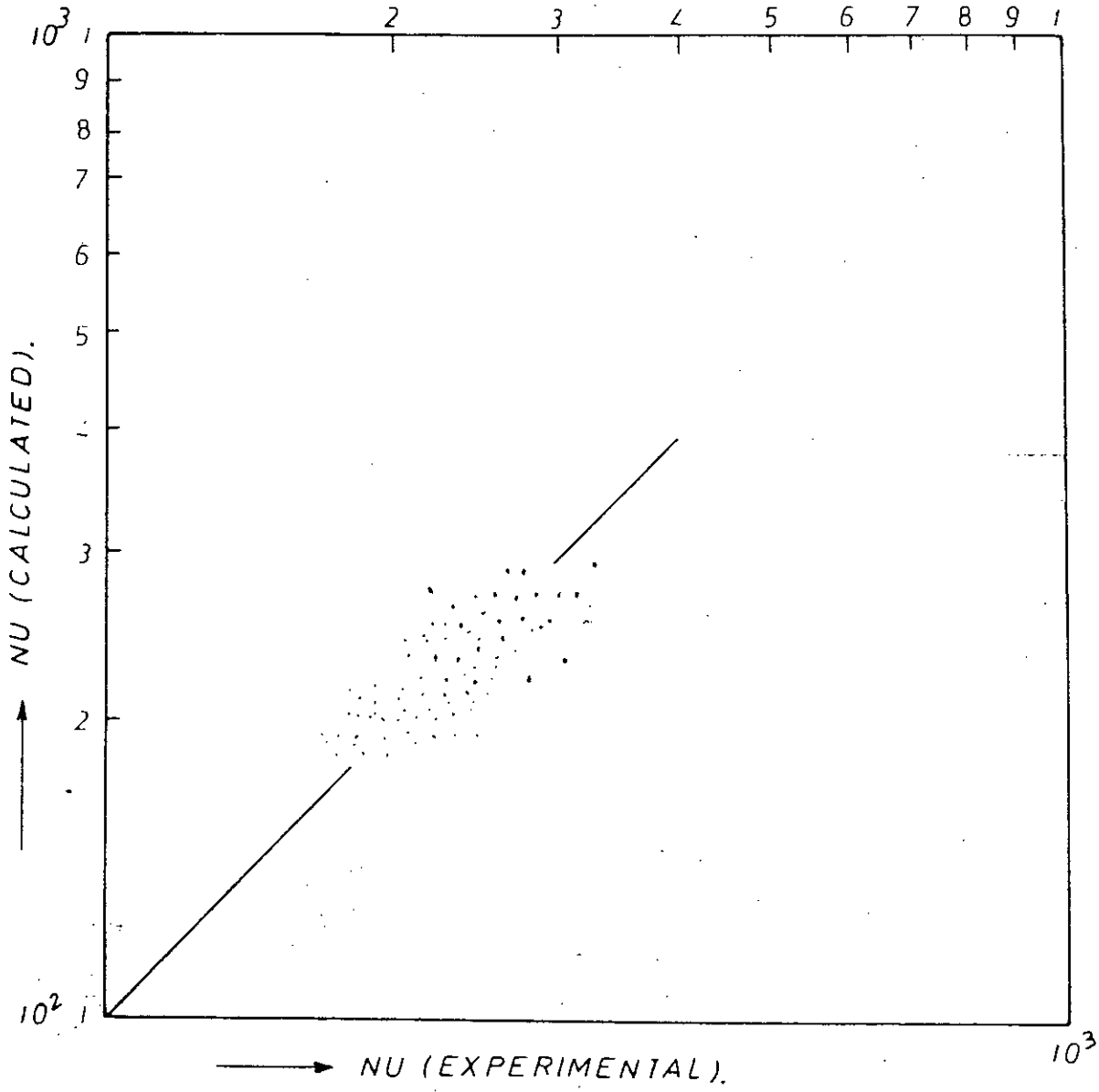

APPENDIX - E

a) Computer programmes of Calculation of Results

```
      DIMENSION RPM(150),LMTD(150),T1(150),T2(150),THETA(150),RMEW(150),
     +RMEWW(150),ROW(150),U(150),RE(150),PR(150),VIS(150),H(150),NU(150)
     +,RJ(150),X(150),Y(150),T(150),A3(150),PRM(150),M(150),C(150),
     +RK(150)
      REAL M,NU,LMTD
C     CALCULATION FOR HEATING
      DATA A,D,RL/0.4255,0.3932,0.3746/
      NN=132
      K=1
      L=4
      READ(1,5)(RPM(I),I=1,NN)
      READ(1,5)(T1(I),I=1,NN)
      READ(1,5)(T2(I),I=1,NN)
      READ(1,5)(THETA(I),I=1,NN)
      READ(1,6)(RMEW(I),I=1,NN)
      READ(1,6)(RMEWW(I),I=1,NN)
      READ(1,4)(ROW(I),I=1,NN)
      READ(1,9)(T(I),I=1,NN)
      READ(1,6)(A3(I),I=1,NN)
      READ(1,5)(M(I),I=1,NN)
      READ(1,6)(C(I),I=1,NN)
      READ(1,6)(RK(I),I=1,NN)
9     FORMAT(12F6.2)
6     FORMAT(12F6.4)
5     FORMAT(12F6.3)
4     FORMAT(6F8.3)
C
      WRITE(3,7)
7     FORMAT(5X,'RPM',5X,'T1',5X,'T2',5X,'T',6X,'THETA',5X,'MEW',9X,
     +'MEWW',5X,'ROW',5X,'A3',8X,'M',9X,'C',9X,'RK',///)
      WRITE(3,8)(RPM(I),T1(I),T2(I),T(I),THETA(I),RMEW(I),RMEWW(I),
     +ROW(I),A3(I),M(I),C(I),RK(I),I=1,NN)
8     FORMAT(4X,F4.1,3X,F5.2,2X,F5.2,2X,F5.1,4X,F5.2,4X,F8.4,3X,F8.4,
     +2X,F8.3,2X,F6.4,3X,F6.3,3X,F6.4,3X,F6.4,///)
105   DO 10 I=K,L
      PRM(I)=RPM(I)
      LMTD(I)=(T2(I)-T1(I))/(ALOG((T(I)-T1(I))/(T(I)-T2(I))))
      U(I)=((M(I)*C(I))/(60.00*THETA(I)*A))*(ALOG((T(I)-T1(I))/(T(I)-T2
     +(I))))
      RE(I)=(RL*RL*PRM(I)*ROW(I))/(RMEW(I)*60.0*0.0001)
      PR(I)=(C(I)*RMEW(I))/(10.0*RK(I))
      VIS(I)=RMEWW(I)/RMEW(I)
10    CONTINUE
      CALL PAPRI(U,PRM,X,Y,K,L,PHY)
C     WRITE(3,99)PHY
C     FORMAT(20X,F20.4)
C
      DO 12 I=K,L
C
      H(I)=1.0/((1.0/U(I))-PHY)
      NU(I)=(H(I)*D/RK(I))*1000.0
      RJ(I)=NU(I)/((VIS(I)**A3(I))*(PR(I)**0.334))
C     RJJ(I)=NU(I)/((VIS(I)**0.056)*(PR(I)**0.334))
C     NUC(I)=(0.0628*(RE(I)**0.634)*(PR(I)**0.334)*(VIS(I)**0.056))
C     Z(I)=((NU(I)-NUC(I))**2.0)
C     WRITE(3,98)(H(I),NU(I),RJ(I),RJJ(I),NUC(I),Z(I),I=K,L)
C     FORMAT(2X,6F15.4)
C
C
12    CONTINUE
      WRITE(3,13)
13    FORMAT(7X,'U',11X,'RE',14X,'PR',13X,'VIS',10X,'PHY',11X,'H',12X,
     +'NU',12X,'RJ',12X,'LMTD',///)
      WRITE(3,15)(U(I),RE(I),PR(I),VIS(I),PHY,H(I),NU(I),RJ(I),
     +LMTD(I),I=K,L)
15    FORMAT(9(F12.5,2X))
      K=L+1
      L=L+4
100   IF(L.LE.132)GO TO 105
      STOP
      END
```

```
      SUBROUTINE PAPRI(U,PRM,X,Y,K,L,PHY)
C
C
      DIMENSION U(150),PRM(150),X(150),Y(150)
C
      DO 5 I=K,L
      Y(I)=1.0/U(I)
      X(I)=(1.0/PRM(I))**0.0667
5     CONTINUE
C
      N=(L-K)+1
      WRITE(3,12)
12    FORMAT(//,15X,'X',20X,'Y',//)
      WRITE(3,13)(X(I),Y(I),I=K,L)
13    FORMAT(10X,F10.5,10X,F10.5)
      SUMX=0.0
      SUMY=0.0
      SUMX2=0.0
      SUMXY=0.0
      DO 11 I=K,L
      SUMX=SUMX+X(I)
      SUMY=SUMY+Y(I)
      SUMX2=SUMX2+X(I)*X(I)
      SUMXY=SUMXY+X(I)*Y(I)
11    CONTINUE
C     RM=SLOPE OF LINE
C     PHY=INTERCEPT
      RM=(N*SUMXY-SUMX*SUMY)/(N*SUMX2-SUMX*SUMX)
      PHY=(SUMX*SUMXY-SUMX2*SUMY)/(SUMX*SUMX-N*SUMX2)
      WRITE(3,14)RM,PHY
14    FORMAT(/////10X,'M=',F10.5,10X,'PHY=',F10.5/////)
      RETURN
      END
```

```
      DIMENSION RPM(50),LMTD(50),T1(50),T2(50),RMEW(50),THETA(50),
     +RMEWW(50),ROW(50),U(50),RE(50),PR(50),VIS(50),H(50),NU(50),RJ(50)
     +,X(50),Y(50),T(50),A3(50),PRM(50),W(50),M(50),C(50),RK(50),RJJ(50
      REAL M,NU,LMTD
C     CALCULATION FOR COOLING
      DATA A,D,RL/0.4255,0.3932,0.2740/
      NN=44
      K=1
      L=4
      READ(1,5)(RPM(I),I=1,NN)
      READ(1,5)(T1(I),I=1,NN)
      READ(1,5)(T2(I),I=1,NN)
      READ(1,5)(THETA(I),I=1,NN)
      READ(1,6)(RMEW(I),I=1,NN)
      READ(1,6)(RMEWW(I),I=1,NN)
      READ(1,4)(ROW(I),I=1,NN)
      READ(1,9)(T(I),I=1,NN)
      READ(1,6)(A3(I),I=1,NN)
      READ(1,6)(W(I),I=1,NN)
      READ(1,5)(M(I),I=1,NN)
      READ(1,6)(C(I),I=1,NN)
      READ(1,6)(RK(I),I=1,NN)
4     FORMAT(6F8.3)
9     FORMAT(12F6.2)
6     FORMAT(12F6.4)
5     FORMAT(12F6.3)
      WRITE(3,7)
7     FORMAT(5X,'RPM',5X,'T1',5X,'T2',5X,'T',5X,'THETA',5X,'MEW',10X,
     +'MEWW',5X,'ROW',7X,'A3',7X,'W',8X,'M',8X,'C',8X,'RK',///)
      WRITE(3,6)(RPM(I),T1(I),T2(I),T(I),THETA(I),RMEW(I),RMEWW(I),
     +ROW(I),A3(I),W(I),M(I),C(I),RK(I),I=1,NN)
8     FORMAT(4X,F4.1,3X,F5.2,2X,F5.2,2X,F5.1,4X,F5.2,4X,F8.4,3X,F8.4,
     +2X,F8.3,2X,F6.4,3X,F6.4,3X,F6.3,3X,F5.4,3X,F5.4,///)
105   DO 10 I=K,L
      PRM(I)=RPM(I)
C
      LMTD(I)=(T1(I)-T2(I))/(ALOG((T1(I)-T(I))/(T2(I)-T(I))))
      U(I)=((0.069745000*W(I))/A)*(LOG(1.0/(1.0-((M(I)*C(I))/(4.18470*
     +W(I)*THETA(I)))*ALOG((T1(I)-T(I))/(T2(I)-T(I))))))
      RE(I)=(RL*RL*PRM(I)*ROW(I))/(RMEW(I)*60.0*0.0001)
      PR(I)=(C(I)*RMEW(I))/(RK(I)*10.0)
      VIS(I)=RMEWW(I)/RMEW(I)
10    CONTINUE
      CALL SIBLY(U,PRM,X,Y,K,L,PHY)
      DO 12 I=K,L
C
      H(I)=1.0/((1.0/U(I))-PHY)
      NU(I)=(H(I)*D/RK(I))*[illegible]
C     RJJ(I)=NU(I)/((VIS(I)**0.0[illegible])*(PR(I)**0.2334))
C     NUC(I)=(0.0628*(RE(I)**0.7[illegible])*(PR(I)**0.334)*(VIS(I)**0.056))
C     Z(I)=((NU(I)-NUC(I))**2.0)
C
      RJ(I)=NU(I)/((VIS(I)**A3(I))*(PR(I)**0.334))
12    CONTINUE
      WRITE(3,13)
13    FORMAT(7X,'U',11X,'RE',14X,'PR',11X,'VIS',10X,'PHY',11X,'H',12X,
     +'NU',12X,'RJ',12X,'LMTD',///)
      WRITE(3,15)(U(I),RE(I),PR(I),VIS(I),PHY,H(I),NU(I),RJ(I),
     +LMTD(I),I=K,L)
15    FORMAT(9(F12.5,2X))
      K=L+1
      L=L+4
100   IF(L.LE.44)GO TO 105
      STOP
      END
```

```
      SUBROUTINE SIBLY(U,PEM,X,Y,K,L,PHY)
C
C
      DIMENSION U(50),PEM(50),X(50),Y(50)
C
      DO 5 I=K,L
      Y(I)=1.0/U(I)
      X(I)=(1.0/PEM(I))**0.6667
5     CONTINUE
C
      N=(L-K)+1
      WRITE(3,12)
12    FORMAT(//,15X,'X',20X,'Y',//)
      WRITE(3,13)(X(I),Y(I),I=K,L)
13    FORMAT(10X,F10.5,10X,F10.5)
      SUMX=0.0
      SUMY=0.0
      SUMX2=0.0
      SUMXY=0.0
      DO 11 I=K,L
      SUMX=SUMX+X(I)
      SUMY=SUMY+Y(I)
      SUMX2=SUMX2+X(I)*X(I)
      SUMXY=SUMXY+X(I)*Y(I)
11    CONTINUE
C
C
      RM=(N*SUMXY-SUMX*SUMY)/(N*SUMX2-SUMX*SUMX)
      PHY=(SUMX*SUMXY-SUMX2*SUMY)/(SUMX*SUMX-N*SUMX2)
      WRITE(3,14)RM,PHY
14    FORMAT(/////10X,'M=',F10.5,10X,'PHY=',F10.5/////)
      RETURN
      END
```

b) Computer Programes of
Regression Analysis

```
      DIMENSION PR(150),SNU(150),RE(150),MEW(150),MEWW(150),X(150),
     +Y(150),Z(150),P1(150),P2(150),P3(150),Q1(150),Q2(150),Q3(150),
     +Q4(150),Q5(150),SNUC(150),S1(150),S2(150),S3(150),SNU1(150),
     +SNU2(150),SNU3(150),SNU4(150),SNU5(150),S4(150),S5(150),S9(150)
      REAL MEW,MEWW
      NN=132
      K=1
      L=12
      READ(1,10)(SNU(I),I=1,NN)
      READ(1,10)(RE(I),I=1,NN)
      READ(1,10)(PR(I),I=1,NN)
      READ(1,10)(MEW(I),I=1,NN)
      READ(1,10)(MEWW(I),I=1,NN)
C
C
10    FORMAT(6F12.5)
C
C
C
C
100   T1=0.0
      T2=0.0
      T3=0.0
      T4=0.0
      T5=0.0
C
C
C
      R1=0.0
      R2=0.0
      R3=0.0
      R4=0.0
      R5=0.0
      SUMX=0.0
      SUMY=0.0
      SUMZ=0.0
      DO 11 I=K,L
      Y(I)=ALOG10(SNU(I)/(PR(I)**0.334))
      X(I)=ALOG10(RE(I))
      Z(I)=ALOG10(MEWW(I)/MEW(I))
      SUMX=SUMX+X(I)
      SUMY=SUMY+Y(I)
      SUMZ=SUMZ+Z(I)
11    CONTINUE
C     WRITE(3,20)
C     FORMAT(10X,'Y',15X,'X',15X,'Z',/)
C     WRITE(3,21)(Y(I),X(I),Z(I),I=K,L)
C     FORMAT(3(F12.5,2X))
      AVX=SUMX/12
      AVY=SUMY/12
      AVZ=SUMZ/12
      DO 12 I=K,L
      P1(I)=X(I)-AVX
      P2(I)=Y(I)-AVY
      P3(I)=Z(I)-AVZ
      Q1(I)=P1(I)*P1(I)
      Q2(I)=P3(I)*P3(I)
      Q3(I)=P1(I)*P3(I)
      Q4(I)=P1(I)*P2(I)
      Q5(I)=P2(I)*P3(I)
      R1=R1+Q1(I)
      R2=R2+Q3(I)
      R3=R3+Q4(I)
      R4=R4+Q2(I)
      R5=R5+Q5(I)
```

```
C
12    CONTINUE
C     WRITE(3,13)
C     FORMAT(8X,'P1',10X,'P2',10X,'P3',10X,'Q1',10X,'Q2',10X,'Q3',10X,
C    +'Q4',10X,'Q5',/)
C     WRITE(3,14)(P1(I),P2(I),P3(I),Q1(I),Q2(I),Q3(I),Q4(I),Q5(I),
C    +I=K,L)
C     FORMAT(8(F13.8,2X))
C
      WRITE(3,15)R1,R2,R3,R4,R5
15    FORMAT(//3X,'R1=',F12.5,3X,'R2=',F12.5,3X,'R3=',F12.5,3X,'R4=',
     +F12.5,3X,'R5=',F12.5//)
      C=0.14
      B=(R3-(C*R2))/R1
      A=(AVY-(B*AVX)-(C*AVZ))
      D=10.0**A
      WRITE(3,22)AVX,AVY,AVZ,B,C,A,D
22    FORMAT(///3X,'AVX=',F9.5,3X,'AVY=',F9.5,3X,'AVZ=',F9.5,3X,'B=',
     +F10.5,3X,'C=',F10.5,3X,'A=',F12.7,3X,'D=',F12.8//)
C
      DO 23 I=K,L
      S9(I)=(PR(I)**0.330)*((MUWW(I)/MUW(I))**0.14)
      SNU1(I)=0.0367*(RE(I)**0.6640)*S9(I)
      SNU2(I)=0.0305*(RE(I)**0.6800)*S9(I)
      SNU3(I)=0.0583*(RE(I)**0.6600)*S9(I)
      SNU4(I)=0.0687*(RE(I)**0.6600)*S9(I)
      SNU5(I)=0.0355*(RE(I)**0.6640)*S9(I)
      S1(I)=(1.0-(SNU1(I)/SNU(I)))*(1.0-(SNU1(I)/SNU(I)))
      S2(I)=(1.0-(SNU2(I)/SNU(I)))*(1.0-(SNU2(I)/SNU(I)))
      S3(I)=(1.0-(SNU3(I)/SNU(I)))*(1.0-(SNU3(I)/SNU(I)))
      S4(I)=(1.0-(SNU4(I)/SNU(I)))*(1.0-(SNU4(I)/SNU(I)))
      S5(I)=(1.0-(SNU5(I)/SNU(I)))*(1.0-(SNU5(I)/SNU(I)))
      T1=T1+S1(I)
      T2=T2+S2(I)
      T3=T3+S3(I)
      T4=T4+S4(I)
      T5=T5+S5(I)
C
23    CONTINUE
C     SD=((T1/12.0)**0.5)*100.0
C
C
C     WRITE(3,24)
C     FORMAT(10X,'SNUC',10X,'SNU',10X,'S1',10X,'S2',10X,'S3',/)
C     WRITE(3,25)(SNUC(I),SNU(I),S1(I),S2(I),S3(I),I=K,L)
C     FORMAT(5(F12.5,2X))
      WRITE(3,26)T1,T2,T3,T4,T5
26    FORMAT(//5X,'T1=',F10.5,3X,'T2=',F10.5,3X,'T3=',F10.5,3X,'T4=',
     +F10.5,3X,'T5=',F10.5//)
      K=L+1
      L=L+12
      IF(L.LE.NN)GO TO 500
      STOP
      END
```

বাংলাদেশ প্রকৌশল বিশ্ববিদ্যালয়
লাইব্রেরী, ঢাকা
ref 8115
তাং 17-6-87