L-2/T-2/IPE **Date : 15/01/2017**

BANGLADESH UNIVERSITY OF ENGINEERING AND TECHNOLOGY, DHAKA

L-2/T-2 B. Sc. Engineering Examinations 2015-2016

Sub : **ME 265** (Thermodynamics and Heat Transfer)

Full Marks: 280 Time: 3 Hours

USE SEPARATE SCRIPTS FOR EACH SECTION

The figures in the margin indicate full marks.

Symbols have their standard meanings. Assume reasonable data if necessary.

SECTION – A

There are **FOUR** questions in this section. Answer any **THREE**.

1. (a) What is renewable energy? What are the advantages of renewable energy? Name five sources of renewable energy. **(6⅔)**

   (b) Write short note on: **(40)**

   (i) Stoichiometric air-fuel ratio

   (ii) Nuclear fusion energy

   (iii) Run off river hydro power

   (iv) Geothermal energy.

2. (a) What are meant by a hydrodynamic boundary layer and a thermal boundary layer? Show with a neat sketch the development of hydrodynamic boundary layer on a flat plate. **(15)**

   (b) Consider two large isothermal plates separated by 2-mm thick oil film as shown in Fig. Q. 2(b). The upper plate moves at a constant velocity of 12 m/s, while the lower plate is stationary. Both plates are maintained at 20°C. (i) Obtain the relationship for velocity and temperature distributions in the oil. (ii) Determine the maximum temperature in the oil and the heat flux from the oil to each plate. **(31⅔)**

   [Assume: k = 0.145 W/m.K and μ = 0.800 kg/m.s]

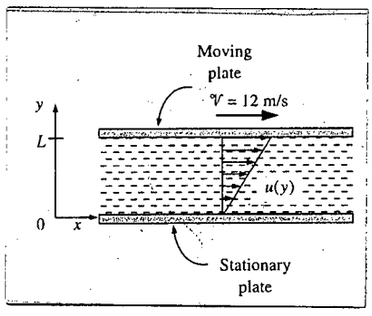

Fig. for Q. 2(b)

3. (a) Consider a steam pipe of length L = 20 m, inner radius r_1 = 6 cm, outer radius r_2 = 8 cm, and thermal conductivity k = 20 W/m.°C as shown in Fig. Q. 3(a). The inner and the outer surfaces of the pipe are maintained at average temperatures of T_1 = 150°C and T_2 = 60°C, respectively. Obtain a general relation for the temperature distribution inside the pipe under steady conditions, and determine the rate of heat loss from the steam through the pipe. **(23⅔)**

Contd P/2

ME 265/IPE

Contd... Q. No. 3(a)

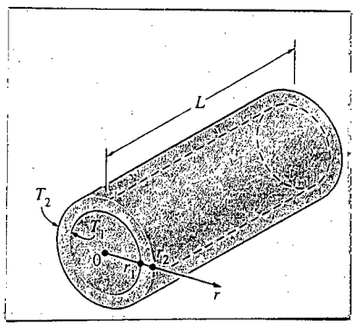

Fig. for Q. 3(a)

(b) Consider a 0.8 m high and 1.5 m wide double-pane window consisting of two 4-mm thick layers of glass (k = 0.78 W/m.°C) separated by a 10-mm wide stagnant air space (k = 0.026 W/m.°C) as in Fig. Q. 3(b). Determine the steady rate of heat transfer through this double pane window and the temperature of its inner surface for a day during which the room is maintained at 20°C, while the temperature of the outdoors is –10°C. Take convection coefficients on the inner and the outer surfaces of the window to be h_1 = 10 W/m^2.°C and h_2 = 40 W/m^2.°C, which includes the effects of radiation. **(23)**

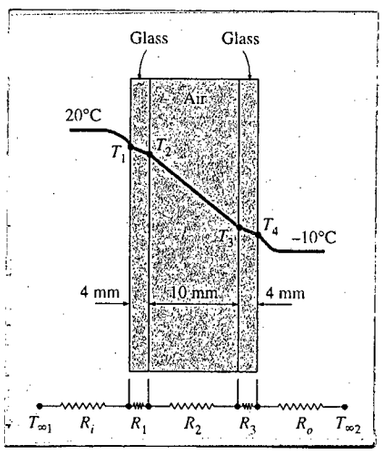

Fig. for Q. 3(b)

4. (a) When a thermocouple is moved from one medium to another medium at a different temperature, the thermocouple must be given sufficient time to come to thermal equilibrium with the new conditions before a reading is taken. Consider a 0.10 cm diameter copper thermocouple wire originally at 150°C. Determine the time required for the thermocouple wire to reach 67°C when the wire is suddenly immersed in: **(26⅔)**

   (i) water at 40°C (h = 80 W/m^{2}K) and

   (ii) air at 40°C (h = 10 W/m^{2}K).

   [Assume: k_s = 391 W/mK, C = 383 J/kgK, ρ = 8930 kg/m^3]

   (b) Discuss critical thickness of insulation. Derive an expression for critical radius of insulation. **(20)**

Contd P/3

ME 265/IPE

SECTION – B

There are **FOUR** questions in this section. Answer any **THREE**.

5. (a) Define Ton of Refrigeration and COP. A refrigeration system with a COP of 4.5 requires 5 kW of power to run at full capacity. Calculate its cooling capacity in TR. **(12⅔)**

(b) Using a schematic diagram, identify the main components of refrigeration system used in a domestic fridge. A fridge is advertised with "Non-CFC" mark, briefly explain what it means. **(16)**

(c) Define pressure ratio for a gas turbine. A gas turbine working on air standard Brayton cycle operates between the temperature limits of 300 K and 1200 K and pressure limits of 1 bar and 5 bar. Calculate – (i) thermal efficiency of the cycle (ii) air flow rate required for generating a net power output of 3 kW. **(18)**

6. (a) What do you understand by MEP of an engine? Distinguish between P-v diagrams of an air standard and real Otto cycle reciprocating IC engine. **(17)**

(b) The compression ratio of an air-standard Otto cycle is 9. Air is compressed from an initial state of 1 bar and 30°C and heat transferred per cycle is 1700 kJ/kg of air. Determine- **(21)**

(i) Pressure and temperature at the end of each process of the cycle.
(ii) Thermal efficiency
(iii) MEP.

(c) What has limited the use of two-stroke IC engines? Give examples where they are still used. **(8⅔)**

7. (a) Briefly state the desired characteristics of an ideal boiler. **(10⅔)**

(b) What do you understand by superheating of steam in a boiler? Briefly explain why it is done. **(12)**

(c) A steam power plant operates on a single stage reheat cycle. Steam supplied from the boiler is at 150 bar and 550°C. Reheating is done up to the same temperature at 40 bar and the condenser operates at 0.1 bar. Calculate – (i) Turbine work (ii) Thermal efficiency of cycle. **(24)**

8. (a) Define "Critical Point" and "Triple Point" for a pure substance. Give an example. **(14)**

(b) State the relation between WBT and RH in psychrometry. Define "Dew-Point" temperature. **(12⅔)**

(c) Air flow of 25 kg/h at 30°C DBT and 60% RH is mixed adiabatically with cold air flow of 5 kg/h at 5°C and 30% RH. Calculate the DBT and RH of the mixed air. **(20)**

ME 265/ IPE

Table A.5 Saturated Steam Temperature Table

Temp. °C T	Press. kPa P	Specific Volume Sat. Liquid v_f	Specific Volume Sat. Vapor v_g	Internal Energy Sat. Liquid u_f	Internal Energy Evap. u_{fg}	Internal Energy Sat. Vapor u_g	Enthalpy Sat. Liquid h_f	Enthalpy Evap. h_{fg}	Enthalpy Sat. Vapor h_g	Entropy Sat. Liquid s_f	Entropy Evap. s_{fg}	Entropy Sat. Vapor s_g
0.01	0.6113	0.001 000	206.14	.00	2375.3	2375.3	.01	2501.3	2501.4	.0000	9.1562	9.1562
5	0.8721	0.001 000	147.12	20.97	2361.3	2382.3	20.98	2489.6	2510.6	.0761	8.9496	9.0257
10	1.2276	0.001 000	106.38	42.00	2347.2	2389.2	42.01	2477.7	2519.8	.1510	8.7498	8.9008
15	1.7051	0.001 001	77.93	62.99	2333.1	2396.1	62.99	2465.9	2528.9	.2245	8.5569	8.7814
20	2.339	0.001 002	57.79	83.95	2319.0	2402.9	83.96	2454.1	2538.1	.2966	8.3706	8.6672
25	3.169	0.001 003	43.36	104.88	2304.9	2409.8	104.89	2442.3	2547.2	.3674	8.1905	8.5580
30	4.246	0.001 004	32.89	125.78	2290.8	2416.6	125.79	2430.5	2556.3	.4369	8.0164	8.4533
35	5.628	0.001 006	25.22	146.67	2276.7	2423.4	146.68	2418.6	2565.3	.5053	7.8478	8.3531
40	7.384	0.001 008	19.52	167.56	2262.6	2430.1	167.57	2406.7	2574.3	.5725	7.6845	8.2570
45	9.593	0.001 010	15.26	188.44	2248.4	2436.8	188.45	2394.8	2583.2	.6387	7.5261	8.1648
50	12.349	0.001 012	12.03	209.32	2234.2	2443.5	209.33	2382.7	2592.1	.7038	7.3725	8.0763
55	15.758	0.001 015	9.568	230.21	2219.9	2450.1	230.23	2370.7	2600.9	.7679	7.2234	7.9913
60	19.940	0.001 017	7.671	251.11	2205.5	2456.6	251.13	2358.5	2609.6	.8312	7.0784	7.9096
65	25.03	0.001 020	6.197	272.02	2191.1	2463.1	272.06	2346.2	2618.3	.8935	6.9375	7.8310
70	31.19	0.001 023	5.042	292.95	2176.6	2469.6	292.98	2333.8	2626.8	.9549	6.8004	7.7553
75	38.58	0.001 026	4.131	313.90	2162.0	2475.9	313.93	2321.4	2635.3	1.0155	6.6669	7.6824
80	47.39	0.001 029	3.407	334.86	2147.4	2482.2	334.91	2308.8	2643.7	1.0753	6.5369	7.6122
85	57.83	0.001 033	2.828	355.84	2132.6	2488.4	355.90	2296.0	2651.9	1.1343	6.4102	7.5445
90	70.14	0.001 036	2.361	376.85	2117.7	2494.5	376.92	2283.2	2660.1	1.1925	6.2866	7.4791
95	84.55	0.001 040	1.982	397.88	2102.7	2500.6	397.96	2270.2	2668.1	1.2500	6.1659	7.4159
100	0.101 35	0.001 044	1.6729	418.94	2087.6	2506.5	419.04	2257.0	2676.1	1.3069	6.0480	7.3549
105	0.120 82	0.001 048	1.4194	440.02	2072.3	2512.4	440.15	2243.7	2683.8	1.3630	5.9328	7.2958
110	0.143 27	0.001 052	1.2102	461.14	2057.0	2518.1	461.30	2230.2	2691.5	1.4185	5.8202	7.2387
115	0.169 06	0.001 056	1.0366	482.30	2041.4	2523.7	482.48	2216.5	2699.0	1.4734	5.7100	7.1833
120	0.198 53	0.001 060	0.8919	503.50	2025.8	2529.3	503.71	2202.6	2706.3	1.5276	5.6020	7.1296
125	0.2321	0.001 065	0.7706	524.74	2009.9	2534.6	524.99	2188.5	2713.5	1.5813	5.4962	7.0775
130	0.2701	0.001 070	0.6685	546.02	1993.9	2539.9	546.31	2174.2	2720.5	1.6344	5.3925	7.0269
135	0.3130	0.001 075	0.5822	567.35	1977.7	2545.0	567.69	2159.6	2727.3	1.6870	5.2907	6.9777
140	0.3613	0.001 080	0.5089	588.74	1961.3	2550.0	589.13	2144.7	2733.9	1.7391	5.1908	6.9299
145	0.4154	0.001 085	0.4463	610.18	1944.7	2554.9	610.63	2129.6	2740.3	1.7907	5.0926	6.8833
150	0.4758	0.001 091	0.3928	631.68	1927.9	2559.5	632.20	2114.3	2746.5	1.8418	4.9960	6.8379
155	0.5431	0.001 096	0.3468	653.24	1910.8	2564.1	653.84	2098.6	2752.4	1.8925	4.9010	6.7935
160	0.6178	0.001 102	0.3071	674.87	1893.5	2568.4	675.55	2082.6	2758.1	1.9427	4.8075	6.7502
165	0.7005	0.001 108	0.2727	696.56	1876.0	2572.5	697.34	2066.2	2763.5	1.9925	4.7153	6.7078
170	0.7917	0.001 114	0.2428	718.33	1858.1	2576.5	719.21	2049.5	2768.7	2.0419	4.6244	6.6663
175	0.8920	0.001 121	0.2168	740.17	1840.0	2580.2	741.17	2032.4	2773.6	2.0909	4.5347	6.6256
180	1.0021	0.001 127	0.194 05	762.09	1821.6	2583.7	763.22	2015.0	2778.2	2.1396	4.4461	6.5857
185	1.1227	0.001 134	0.174 09	784.10	1802.9	2587.0	785.37	1997.1	2782.4	2.1879	4.3586	6.5465
190	1.2544	0.001 141	0.156 54	806.19	1783.8	2590.0	807.62	1978.8	2786.4	2.2359	4.2720	6.5079
195	1.3978	0.001 149	0.141 05	828.37	1764.4	2592.8	829.98	1960.0	2790.0	2.2835	4.1863	6.4698
200	1.5538	0.001 157	0.127 36	850.65	1744.7	2595.3	852.45	1940.7	2793.2	2.3309	4.1014	6.4323
205	1.7230	0.001 164	0.115 21	873.04	1724.5	2597.5	875.04	1921.0	2796.0	2.3780	4.0172	6.3952
210	1.9062	0.001 173	0.104 41	895.53	1703.9	2599.5	897.76	1900.7	2798.5	2.4248	3.9337	6.3585
215	2.104	0.001 181	0.094 79	918.14	1682.9	2601.1	920.62	1879.9	2800.5	2.4714	3.8507	6.3221
220	2.318	0.001 190	0.086 19	940.87	1661.5	2602.4	943.62	1858.5	2802.1	2.5178	3.7683	6.2861
225	2.548	0.001 199	0.078 49	963.73	1639.6	2603.3	966.78	1836.5	2803.3	2.5639	3.6863	6.2503
230	2.795	0.001 209	0.071 58	986.74	1617.2	2603.9	990.12	1813.8	2804.0	2.6099	3.6047	6.2146
235	3.060	0.001 219	0.065 37	1009.89	1594.2	2604.1	1013.62	1790.5	2804.2	2.6558	3.5233	6.1791
240	3.344	0.001 229	0.059 76	1033.21	1570.8	2604.0	1037.32	1766.5	2803.8	2.7015	3.4422	6.1437
245	3.648	0.001 240	0.054 71	1056.71	1546.7	2603.4	1061.23	1741.7	2803.0	2.7472	3.3612	6.1083

Temp. °C	v m³/kg	h kJ/kg	s kJ/kg K	u kJ/kg

Table A.5 Saturated Steam Temperature Table (*Continued*)

Temp. °C T	Press. MPa P	Specific Volume Sat. Liquid v_f	Specific Volume Sat. Vapor v_g	Internal Energy Sat. Liquid u_f	Internal Energy Evap. u_{fg}	Internal Energy Sat. Vapor u_g	Enthalpy Sat. Liquid h_f	Enthalpy Evap. h_{fg}	Enthalpy Sat. Vapor h_g	Entrop. Sat. Liquid s_f	Entrop. Evap. s_{fg}	Sat Vap s_g
250	3.973	0.001 251	0.050 13	1080.39	1522.0	2602.4	1085.36	1716.2	2801.5	2.7927	3.2802	6.07
255	4.319	0.001 263	0.045 98	1104.28	1496.7	2600.9	1109.73	1689.8	2799.5	2.8383	3.1992	6.03
260	4.688	0.001 276	0.042 21	1128.39	1470.6	2599.0	1134.37	1662.5	2796.9	2.8838	3.1181	6.00
265	5.081	0.001 289	0.038 77	1152.74	1443.9	2596.6	1159.28	1634.4	2793.6	2.9294	3.0365	5.96
270	5.499	0.001 302	0.035 64	1177.36	1416.3	2593.7	1184.51	1605.2	2789.7	2.9751	2.9551	5.93
275	5.942	0.001 317	0.032 79	1202.25	1387.9	2590.2	1210.07	1574.9	2785.0	3.0208	2.8730	5.89
280	6.412	0.001 332	0.030 17	1227.46	1358.7	2586.1	1235.99	1543.6	2779.6	3.0668	2.7905	5.85
285	6.909	0.001 348	0.027 77	1253.00	1328.4	2581.4	1262.31	1511.0	2773.3	3.1130	2.7070	5.81
290	7.436	0.001 366	0.025 57	1278.92	1297.1	2576.0	1289.07	1477.1	2766.2	3.1594	2.6227	5.78
295	7.993	0.001 384	0.023 54	1305.2	1264.7	2569.9	1316.3	1441.8	2758.1	3.2062	2.5375	5.74
300	8.581	0.001 404	0.021 67	1332.0	1231.0	2563.0	1344.0	1404.9	2749.0	3.2534	2.4511	5.70
305	9.202	0.001 425	0.019 948	1359.3	1195.9	2555.2	1372.4	1366.4	2738.7	3.3010	2.3635	5.66
310	9.856	0.001 447	0.018 350	1387.1	1159.4	2546.4	1401.3	1326.0	2727.3	3.3493	2.2737	5.62
315	10.547	0.001 472	0.016 867	1415.5	1121.1	2536.6	1431.0	1283.5	2714.5	3.3982	2.1821	5.58
320	11.274	0.001 499	0.015 488	1444.6	1080.9	2525.5	1461.5	1238.6	2700.1	3.4480	2.0882	5.53
330	12.845	0.001 561	0.012 996	1505.3	993.7	2498.9	1525.3	1140.6	2665.9	3.5507	1.8909	5.44
340	14.586	0.001 638	0.010 797	1570.3	894.3	2464.6	1594.2	1027.9	2622.0	3.6594	1.6763	5.33
350	16.513	0.001 740	0.008 813	1641.9	776.6	2418.4	1670.6	893.4	2563.9	3.7777	1.4335	5.21
360	18.651	0.001 893	0.006 945	1725.2	626.3	2351.5	1760.5	720.5	2481.0	3.9147	1.1379	5.05
370	21.03	0.002 213	0.004 925	1844.0	384.5	2228.5	1890.5	441.6	2332.1	4.1106	.6865	4.79
374.14	22.09	0.003 155	0.003 155	2029.6	0	2029.6	2099.3	0	2099.3	4.4298	0	4.42

SOURCE: Reproduced from Joseph H. Keenan, Frederick G. Keyes, Philip G. Hill, and Joan G. Moore, *Steam Tables* (New York: John Wile Sons, Inc., 1969) with permission.

Table A.6 Saturated Steam Pressure Table

Press. kPa P	Temp. °C T	Specific Volume Sat. Liquid v_f	Specific Volume Sat. Vapor v_g	Internal Energy Sat. Liquid u_f	Internal Energy Evap. u_{fg}	Internal Energy Sat. Vapor u_g	Enthalpy Sat. Liquid h_f	Enthalpy Evap. h_{fg}	Enthalpy Sat. Vapor h_g	Entropy Sat. Liquid s_f	Entropy Evap. s_{fg}	Sa Vap s_g
0.6113	0.01	0.001 000	206.14	.00	2375.3	2375.3	.01	2501.3	2501.4	.0000	9.1562	9.15
1.0	6.98	0.001 000	129.21	29.30	2355.7	2385.0	29.30	2484.9	2514.2	.1059	8.869	8.97
1.5	13.03	0.001 001	87.98	54.71	2338.6	2393.3	54.71	2470.6	2525.3	.1957	8.6322	8.82
2.0	17.50	0.001 001	67.00	73.48	2326.0	2399.5	73.48	2460.0	2533.5	.2607	8.4629	8.72
2.5	21.08	0.001 002	54.25	88.48	2315.9	2404.4	88.49	2451.6	2540.0	.3120	8.331	8.64
3.0	24.08	0.001 003	45.67	101.04	2307.5	2408.5	101.05	2444.5	2545.5	.3545	8.2231	8.57
4.0	28.96	0.001 004	34.80	121.45	2293.7	2415.2	121.46	2432.9	2554.4	.4226	8.0520	8.47
5.0	32.88	0.001 005	28.19	137.81	2282.7	2420.5	137.82	2423.7	2561.5	.4764	7.9187	8.39
7.5	40.29	0.001 008	19.24	168.78	2261.7	2430.5	168.79	2406.0	2574.8	.5764	7.6750	8.25
10	45.81	0.001 010	14.67	191.82	2246.1	2437.9	191.83	2392.8	2584.7	.6493	7.5009	8.15
15	53.97	0.001 014	10.02	225.92	2222.8	2448.7	225.94	2373.1	2599.1	.7549	7.253	8.00
20	60.06	0.001 017	7.649	251.38	2205.4	2456.7	251.40	2358.3	2609.7	.8320	7.076	7.90
25	64.97	0.001 020	6.204	271.90	2191.2	2463.1	271.93	2346.3	2618.2	.8931	6.9383	7.83
30	69.10	0.001 022	5.229	289.20	2179.2	2468.4	289.23	2336.1	2625.3	.9439	6.8247	7.76
40	75.87	0.001 027	3.993	317.53	2159.5	2477.0	317.58	2319.2	2636.8	1.0259	6.6441	7.67
50	81.33	0.001 030	3.240	340.44	2143.4	2483.9	340.49	2305.4	2645.9	1.0910	6.5029	7.59
75	91.78	0.001 037	2.217	384.31	2112.4	2496.7	384.39	2278.6	2663.0	1.2130	6.2434	7.45
MPa												
0.100	99.63	0.001 043	1.6940	417.36	2088.7	2506.1	417.46	2258.0	2675.5	1.3026	6.0568	7.35
0.125	105.99	0.001 048	1.3749	444.19	2069.3	2513.5	444.32	2241.0	2685.4	1.3740	5.9104	7.28
0.150	111.37	0.001 053	1.1593	466.94	2052.7	2519.7	467.11	2226.5	2693.6	1.4336	5.7897	7.22
0.175	116.06	0.001 057	1.0036	486.80	2038.1	2524.9	486.99	2213.6	2700.6	1.4849	5.6860	7.17
0.200	120.23	0.001 061	0.8857	504.49	2025.0	2529.5	504.70	2201.9	2706.7	1.5301	5.5970	7.12
0.225	124.00	0.001 064	0.7933	520.47	2013.1	2533.6	520.72	2191.3	2712.1	1.5706	5.5175	7.08

ME 265/IPE

= 5 =

...rated Steam Pressure Table (*Continued*)

...s. MPa P	Temp. °C T	Specific Volume Sat. Liquid v_f	Specific Volume Sat. Vapor v_g	Internal Energy Sat. Liquid u_f	Internal Energy Evap. u_{fg}	Internal Energy Sat. Vapor u_g	Enthalpy Sat. Liquid h_f	Enthalpy Evap. h_{fg}	Enthalpy Sat. Vapor h_g	Entropy Sat. Liquid s_f	Entropy Evap. s_{fg}	Entropy Sat. Vapor s_g
0.250	127.44	0.001 067	0.7187	535.10	2002.1	2537.2	535.37	2181.5	2716.9	1.6072	5.4455	7.0527
0.275	130.60	0.001 070	0.6573	548.59	1991.9	2540.5	548.89	2172.4	2721.3	1.6408	5.3801	7.0209
0.300	133.55	0.001 073	0.6058	561.15	1982.4	2543.6	561.47	2163.8	2725.3	1.6718	5.3201	6.9919
0.325	136.30	0.001 076	0.5620	572.90	1973.5	2546.4	573.25	2155.8	2729.0	1.7006	5.2646	6.9652
0.350	138.88	0.001 079	0.5243	583.95	1965.0	2548.9	584.33	2148.1	2732.4	1.7275	5.2130	6.9405
0.375	141.32	0.001 081	0.4914	594.40	1956.9	2551.3	594.81	2140.8	2735.6	1.7528	5.1647	6.9175
0.40	143.63	0.001 084	0.4625	604.31	1949.3	2553.6	604.74	2133.8	2738.6	1.7766	5.1193	6.8959
0.45	147.93	0.001 088	0.4140	622.77	1934.9	2557.6	623.25	2120.7	2743.9	1.8207	5.0359	6.8565
0.50	151.86	0.001 093	0.3749	639.68	1921.6	2561.2	640.23	2108.5	2748.7	1.8607	4.9606	6.8213
0.55	155.48	0.001 097	0.3427	655.32	1909.2	2564.5	655.93	2097.0	2753.0	1.8973	4.8920	6.7893
0.60	158.85	0.001 101	0.3157	669.90	1897.5	2567.4	670.56	2086.3	2756.8	1.9312	4.8288	6.7600
0.65	162.01	0.001 104	0.2927	683.56	1886.5	2570.1	684.28	2076.0	2760.3	1.9627	4.7703	6.7331
0.70	164.97	0.001 108	0.2729	696.44	1876.1	2572.5	697.22	2066.3	2763.5	1.9922	4.7158	6.7080
0.75	167.78	0.001 112	0.2556	708.64	1866.1	2574.7	709.47	2057.0	2766.4	2.0200	4.6647	6.6847
0.80	170.43	0.001 115	0.2404	720.22	1856.6	2576.8	721.11	2048.0	2769.1	2.0462	4.6166	6.6628
0.85	172.96	0.001 118	0.2270	731.27	1847.4	2578.7	732.22	2039.4	2771.6	2.0710	4.5711	6.6421
0.90	175.38	0.001 121	0.2150	741.83	1838.6	2580.5	742.83	2031.1	2773.9	2.0946	4.5280	6.6226
0.95	177.69	0.001 124	0.2042	751.95	1830.2	2582.1	753.02	2023.1	2776.1	2.1172	4.4869	6.6041
1.00	179.91	0.001 127	0.194 44	761.68	1822.0	2583.6	762.81	2015.3	2778.1	2.1387	4.4478	6.5865
1.10	184.09	0.001 133	0.177 53	780.09	1806.3	2586.4	781.34	2000.4	2781.7	2.1792	4.3744	6.5536
1.20	187.99	0.001 139	0.163 33	797.29	1791.5	2588.8	798.65	1986.2	2784.8	2.2166	4.3067	6.5233
1.30	191.64	0.001 144	0.151 25	813.44	1777.5	2591.0	814.93	1972.7	2787.6	2.2515	4.2438	6.4953
1.40	195.07	0.001 149	0.140 84	828.70	1764.1	2592.8	830.30	1959.7	2790.0	2.2842	4.1850	6.4693
1.50	198.32	0.001 154	0.131 77	843.16	1751.3	2594.5	844.89	1947.3	2792.2	2.3150	4.1298	6.4448
1.75	205.76	0.001 166	0.113 49	876.46	1721.4	2597.8	878.50	1917.9	2796.4	2.3851	4.0044	6.3896
2.00	212.42	0.001 177	0.099 63	906.44	1693.8	2600.3	908.79	1890.7	2799.5	2.4474	3.8935	6.3409
2.25	218.45	0.001 187	0.088 75	933.83	1668.2	2602.0	936.49	1865.2	2801.7	2.5035	3.7937	6.2972
2.5	223.99	0.001 197	0.079 98	959.11	1644.0	2603.1	962.11	1841.0	2803.1	2.5547	3.7028	6.2575
3.0	233.90	0.001 217	0.066 68	1004.78	1599.3	2604.1	1008.42	1795.7	2804.2	2.6457	3.5412	6.1869
3.5	242.60	0.001 235	0.057 07	1045.43	1558.3	2603.7	1049.75	1753.7	2803.4	2.7253	3.4000	6.1253
4	250.40	0.001 252	0.049 78	1082.31	1520.0	2602.3	1087.31	1714.1	2801.4	2.7964	3.2737	6.0701
5	263.99	0.001 286	0.039 44	1147.81	1449.3	2597.1	1154.23	1640.1	2794.3	2.9202	3.0532	5.9734
6	275.64	0.001 319	0.032 44	1205.44	1384.3	2589.7	1213.35	1571.0	2784.3	3.0267	2.8625	5.8892
7	285.88	0.001 351	0.027 37	1257.55	1323.0	2580.5	1267.00	1505.1	2772.1	3.1211	2.6922	5.8133
8	295.06	0.001 384	0.023 52	1305.57	1264.2	2569.8	1316.64	1441.3	2758.0	3.2068	2.5364	5.7432
9	303.40	0.001 418	0.020 48	1350.51	1207.3	2557.8	1363.26	1378.9	2742.1	3.2858	2.3915	5.6772
10	311.06	0.001 452	0.018 026	1393.04	1151.4	2544.4	1407.56	1317.1	2724.7	3.3596	2.2544	5.6141
11	318.15	0.001 489	0.015 987	1433.7	1096.0	2529.8	1450.1	1255.5	2705.6	3.4295	2.1233	5.5527
12	324.75	0.001 527	0.014 263	1473.0	1040.7	2513.7	1491.3	1193.6	2684.9	3.4962	1.9962	5.4924
13	330.93	0.001 567	0.012 780	1511.1	985.0	2496.1	1531.5	1130.7	2662.2	3.5606	1.8718	5.4323
14	336.75	0.001 611	0.011 485	1548.6	928.2	2476.8	1571.1	1066.5	2637.6	3.6232	1.7485	5.3717
15	342.24	0.001 658	0.010 337	1585.6	869.8	2455.5	1610.5	1000.0	2610.5	3.6848	1.6249	5.3098
16	347.44	0.001 711	0.009 306	1622.7	809.0	2431.7	1650.1	930.6	2580.6	3.7461	1.4994	5.2455
17	352.37	0.001 770	0.008 364	1660.2	744.8	2405.0	1690.3	856.9	2547.2	3.8079	1.3698	5.1777
18	357.06	0.001 840	0.007 489	1698.9	675.4	2374.3	1732.0	777.1	2509.1	3.8715	1.2329	5.1044
19	361.54	0.001 924	0.006 657	1739.9	598.1	2338.1	1776.5	688.0	2464.5	3.9388	1.0839	5.0228
20	365.81	0.002 036	0.005 834	1785.6	507.5	2293.0	1826.3	583.4	2409.7	4.0139	.9130	4.9269
21	369.89	0.002 207	0.004 952	1842.1	388.5	2230.6	1888.4	446.2	2334.6	4.1075	.6938	4.8013
22	373.80	0.002 742	0.003 568	1961.9	125.2	2087.1	2022.2	143.4	2165.6	4.3110	.2216	4.5327
22.09	374.14	0.003 155	0.003 155	2029.6	0	2029.6	2099.3	0	2099.3	4.4298	0	4.4298

...URCE: Reproduced from Joseph H. Keenan, Frederick G. Keyes, Philip G. Hill, and Joan G. Moore, *Steam Tables* (New York: John Wiley & ...ns, Inc., 1969) with permission.

Table A.7 Superheated Steam Vapor Table

T	P = .010 MPa (45.81) v	u	h	s	P = .050 MPa (81.33) v	u	h	s	P = .10 MPa (99.63) v	u	h	s
Sat.	14.674	2437.9	2584.7	8.1502	3.240	2483.9	2645.9	7.5939	1.6940	2506.1	2675.5	7.359
50	14.869	2443.9	2592.6	8.1749								
100	17.196	2515.5	2687.5	8.4479	3.418	2511.6	2682.5	7.6947	1.6958	2506.7	2676.2	7.361
150	19.512	2587.9	2783.0	8.6882	3.889	2585.6	2780.1	7.9401	1.9364	2582.8	2776.4	7.613
200	21.825	2661.3	2879.5	8.9038	4.356	2659.9	2877.7	8.1580	2.172	2658.1	2875.3	7.834
250	24.136	2736.0	2977.3	9.1002	4.820	2735.0	2976.0	8.3556	2.406	2733.7	2974.3	8.033
300	26.445	2812.1	3076.5	9.2813	5.284	2811.3	3075.5	8.5373	2.639	2810.4	3074.3	8.215
400	31.063	2968.9	3279.6	9.6077	6.209	2968.5	3278.9	8.8642	3.103	2967.9	3278.2	8.543
500	35.679	3132.3	3489.1	9.8978	7.134	3132.0	3488.7	9.1546	3.565	3131.6	3488.1	8.834
600	40.295	3302.5	3705.4	10.1608	8.057	3302.2	3705.1	9.4178	4.028	3301.9	3704.7	9.097
700	44.911	3479.6	3928.7	10.4028	8.981	3479.4	3928.5	9.6599	4.490	3479.2	3928.2	9.339
800	49.526	3663.8	4159.0	10.6281	9.904	3663.6	4158.9	9.8852	4.952	3663.5	4158.6	9.565
900	54.141	3855.0	4396.4	10.8396	10.828	3854.9	4396.3	10.0967	5.414	3854.8	4396.1	9.776
1000	58.757	4053.0	4640.6	11.0393	11.751	4052.9	4640.5	10.2964	5.875	4052.8	4640.3	9.976
1100	63.372	4257.5	4891.2	11.2287	12.674	4257.4	4891.1	10.4859	6.337	4257.3	4891.0	10.165
1200	67.987	4467.9	5147.8	11.4091	13.597	4467.8	5147.7	10.6662	6.799	4467.7	5147.6	10.346
1300	72.602	4683.7	5409.7	11.5811	14.521	4683.6	5409.6	10.8382	7.260	4683.5	5409.5	10.518

T	P = .20 MPa (120.23) v	u	h	s	P = .30 MPa (133.55) v	u	h	s	P = .40 MPa (143.63) v	u	h	s
Sat.	.8857	2529.5	2706.7	7.1272	.6058	2543.6	2725.3	6.9919	.4625	2553.6	2738.6	6.895
150	.9596	2576.9	2768.8	7.2795	.6339	2570.8	2761.0	7.0778	.4708	2564.5	2752.8	6.929
200	1.0803	2654.4	2870.5	7.5066	.7163	2650.7	2865.6	7.3115	.5342	2646.8	2860.5	7.170
250	1.1988	2731.2	2971.0	7.7086	.7964	2728.7	2967.6	7.5166	.5951	2726.1	2964.2	7.378
300	1.3162	2808.6	3071.8	7.8926	.8753	2806.7	3069.3	7.7022	.6548	2804.8	3066.8	7.566
400	1.5493	2966.7	3276.6	8.2218	1.0315	2965.6	3275.0	8.0330	.7726	2964.4	3273.4	7.898

T	P = .20 MPa (120.23) v	u	h	s	P = .30 MPa (133.55) v	u	h	s	P = .40 MPa (143.63) v	u	h	s
500	1.7814	3130.8	3487.1	8.5133	1.1867	3130.0	3486.0	8.3251	.8893	3129.2	3484.9	8.1913
600	2.013	3301.4	3704.0	8.7770	1.3414	3300.8	3703.2	8.5892	1.0055	3300.2	3702.4	8.4558
700	2.244	3478.8	3927.6	9.0194	1.4957	3478.4	3927.1	8.8319	1.1215	3477.9	3926.5	8.6987
800	2.475	3663.1	4158.2	9.2449	1.6499	3662.9	4157.8	9.0576	1.2372	3662.4	4157.3	8.9244
900	2.706	3854.5	4395.8	9.4566	1.8041	3854.2	4395.4	9.2692	1.3529	3853.9	4395.1	9.1362
1000	2.937	4052.5	4640.0	9.6563	1.9581	4052.3	4639.7	9.4690	1.4685	4052.0	4639.4	9.3360
1100	3.168	4257.0	4890.7	9.8458	2.1121	4256.8	4890.4	9.6585	1.5840	4256.5	4890.2	9.5256
1200	3.399	4467.5	5147.3	10.0262	2.2661	4467.2	5147.1	9.8389	1.6996	4467.0	5146.8	9.7060
1300	3.630	4683.2	5409.3	10.1982	2.4201	4683.0	5409.0	10.0110	1.8151	4682.8	5408.8	9.8780

T	P = .50 MPa (151.86) v	u	h	s	P = .60 MPa (158.85) v	u	h	s	P = .80 MPa (170.43) v	u	h	s
Sat.	.3749	2561.2	2748.7	6.8213	.3157	2567.4	2756.8	6.7600	.2404	2576.8	2769.1	6.6628
200	.4249	2642.9	2855.4	7.0592	.3520	2638.9	2850.1	6.9665	.2608	2630.6	2839.3	6.8158
250	.4744	2723.5	2960.7	7.2709	.3938	2720.9	2957.2	7.1816	.2931	2715.5	2950.0	7.0384
300	.5226	2802.9	3064.2	7.4599	.4344	2801.0	3061.6	7.3724	.3241	2797.2	3056.5	7.2328
350	.5701	2882.6	3167.7	7.6329	.4742	2881.2	3165.7	7.5464	.3544	2878.2	3161.7	7.4089
400	.6173	2963.2	3271.9	7.7938	.5137	2962.1	3270.3	7.7079	.3843	2959.7	3267.1	7.5716
500	.7109	3128.4	3483.9	8.0873	.5920	3127.6	3482.8	8.0021	.4433	3126.0	3480.6	7.8673
600	.8041	3299.6	3701.7	7.3522	.6697	3299.1	3700.9	8.2674	.5018	3297.9	3699.4	8.1333
700	.8969	3477.5	3925.9	8.5952	.7472	3477.0	3925.3	8.5107	.5601	3476.2	3924.2	8.3770
800	.9896	3662.1	4156.9	8.8211	.8245	3661.8	4156.5	8.7367	.6181	3661.1	4155.6	8.6033
900	1.0822	3853.6	4394.7	9.0329	.9017	3853.4	4394.4	8.9486	.6761	3852.8	4393.7	8.8153
1000	1.1747	4051.8	4639.1	9.2328	.9788	4051.5	4638.8	9.1485	.7340	4051.0	4638.2	9.0153
1100	1.2672	4256.3	4889.9	9.4224	1.0559	4256.1	4889.6	9.3381	.7919	4255.6	4889.1	9.2050
1200	1.3596	4466.8	5146.6	9.6029	1.1330	4466.5	5146.3	9.5185	.8497	4466.1	5145.9	9.3855
1300	1.4521	4682.5	5408.6	9.7749	1.2101	4682.3	5408.3	9.6906	.9076	4681.8	5407.9	9.5575

..7 Superheated Steam Vapor Table (*Continued*)

T	v	u	h	s	v	u	h	s	v	u	h	s
	P = 1.00 MPa (179.91)				P = 1.20 MPa (187.99)				P = 1.40 MPa (195.07)			
Sat.	.194 44	2583.6	2778.1	6.5865	.163 33	2588.8	2784.8	6.5233	.140 84	2592.8	2790.0	6.4693
200	.2060	2621.9	2827.9	6.6940	.169 30	2612.8	2815.9	6.5898	.143 02	2603.1	2803.3	6.4975
250	.2327	2709.9	2942.6	6.9247	.192 34	2704.2	2935.0	6.8294	.163 50	2698.3	2927.2	6.7467
300	.2579	2793.2	3051.2	7.1229	.2138	2789.2	3045.8	7.0317	.182 28	2785.2	3040.4	6.9534
350	.2825	2875.2	3157.7	7.3011	.2345	2872.2	3153.6	7.2121	.2003	2869.2	3149.5	7.1360
400	.3066	2957.3	3263.9	7.4651	.2548	2954.9	3260.7	7.3774	.2178	2952.5	3257.5	7.3026
500	.3541	3124.4	3478.5	7.7622	.2946	3122.8	3476.3	7.6759	.2521	3121.1	3474.1	7.6027
600	.4011	3296.8	3697.9	8.0290	.3339	3295.6	3696.3	7.9435	.2860	3294.4	3694.8	7.8710
700	.4478	3475.3	3923.1	8.2731	.3729	3474.4	3922.0	8.1881	.3195	3473.6	3920.8	8.1160
800	.4943	3660.4	4154.7	8.4996	.4118	3659.7	4153.8	8.4148	.3528	3659.0	4153.0	8.3431
900	.5407	3852.2	4392.9	8.7118	.4505	3851.6	4392.2	8.6272	.3861	3851.1	4391.5	8.5556
1000	.5871	4050.5	4637.6	8.9119	.4892	4050.0	4637.0	8.8274	.4192	4049.5	4636.4	8.7559
1100	.6335	4255.1	4888.6	9.1017	.5278	4254.6	4888.0	9.0172	.4524	4254.1	4887.5	8.9457
1200	.6798	4465.6	5145.4	9.2822	.5665	4465.1	5144.9	9.1977	.4855	4464.7	5144.4	9.1262
1300	.7261	4681.3	5407.4	9.4543	.6051	4680.9	5407.0	9.3698	.5186	4680.4	5406.5	9.2984
	P = 1.60 MPa (201.41)				P = 1.80 MPa (207.15)				P = 2.00 MPa (212.42)			
Sat.	.123 80	2596.0	2794.0	6.4218	.110 42	2598.4	2797.1	6.3794	.099 63	2600.3	2799.5	6.3409
225	.132 87	2644.7	2857.3	6.5518	.116 73	2636.6	2846.7	6.4808	.103 77	2628.3	2835.8	6.4147
250	.141 84	2692.3	2919.2	6.6732	.124 97	2686.0	2911.0	6.6066	.111 44	2679.6	2902.5	6.5453
300	.158 62	2781.1	3034.8	6.8844	.140 21	2776.9	3029.2	6.8226	.125 47	2772.6	3023.5	6.7664
350	.174 56	2866.4	3145.4	7.0694	.154 57	2863.0	3141.2	7.0100	.138 57	2859.8	3137.0	6.9563
400	.190 05	2950.1	3254.2	7.2374	.168 47	2947.7	3250.9	7.1794	.151 20	2945 2	3247.6	7.1271
500	.2203	3119.5	3472.0	7.5390	.195 50	3117.9	3469.8	7.4825	.175 68	3116.2	3467.6	7.4317
600	.2500	3293.3	3693.2	7.8080	.2220	3292.1	3691.7	7.7523	.199 60	3290.9	3690.1	7.7024
700	.2794	3472.7	3919.7	8.0535	.2482	3471.8	3918.5	7.9983	.2232	3470.9	3917.4	7.9487
	P = 1.60 MPa (201.41)				P = 1.80 MPa (207.15)				P = 2.00 MPa (212.42)			
800	.3086	3658.3	4152.1	8.2808	.2742	3657.6	4151.2	8.2258	.2467	3657.0	4150.3	8.1765
900	.3377	3850.5	4390.8	8.4935	.3001	3849.9	4390.1	8.4386	.2700	3849.3	4389.4	8.3895
1000	.3668	4049.0	4635.8	8.6938	.3260	4048.5	4635.2	8.6391	.2933	4048.0	4634.6	8.5901
1100	.3958	4253.7	4887.0	8.8837	.3518	4253.2	4886.4	8.8290	.3166	4252.7	4885.9	8.7800
1200	.4248	4464.2	5143.9	9.0643	.3776	4463.7	5143.4	9.0096	.3398	4463.3	5142.9	8.9607
1300	.4538	4679.9	5406.0	9.2364	.4034	4679.5	5405.6	9.1818	.3631	4679.0	5405.1	9.1329
	P = 2.50 MPa (223.99)				P = 3.00 MPa (233.90)				P = 3.50 MPa (242.60)			
Sat.	.079 98	2603.1	2803.1	6.2575	.066 68	2604.1	2804.2	6.1869	.057 07	2603.7	2803.4	6.1253
225	.080 27	2605.6	2806.3	6.2639								
250	.087 00	2662.6	2880.1	6.4085	.070 58	2644.0	2855.8	6.2872	.058 72	2623.7	2829.2	6.1749
300	.098 90	2761.6	3008.8	6.6438	.081 14	2750.1	2993.5	6.5390	.068 42	2738.0	2977.5	6.4461
350	.109 76	2851.9	3126.3	6.8403	.090 53	2843.7	3115.3	6.7428	.076 78	2835.3	3104.0	6.6579
400	.120 10	2939.1	3239.3	7.0148	.099 36	2932.8	3230.9	6.9212	.084 53	2926.4	3222.3	6.8405
450	.130 14	3025.5	3350.8	7.1746	.107 87	3020.4	3344.0	7.0834	.091 96	3015.3	3337.2	7.0052
500	.139 98	3112.1	3462.1	7.3234	.116 19	3108.0	3456.5	7.2338	.099 18	3103.0	3450.9	7.1572
600	.159 30	3288.0	3686.3	7.5960	.132 43	3285.0	3682.3	7.5085	.113 24	3282.1	3678.4	7.4339
700	.178 32	3468.7	3914.5	7.8435	.148 38	3466.5	3911.7	7.7571	.126 99	3464.3	3908.8	7.6837
800	.197 16	3655.3	4148.2	8.0720	.164 14	3653.5	4145.9	7.9862	.140 56	3651.8	4143.7	7.9134
900	.215 90	3847.9	4387.6	8.2853	.179 80	3846.5	4385.9	8.1999	.154 02	3845.0	4384.1	8.1276
1000	.2346	4046.7	4633.1	8.4861	.195 41	4045.4	4631.6	8.4009	.167 43	4044.1	4630.1	8.3288
1100	.2532	4251.5	4884.6	8.6762	.210 98	4250.3	4883.3	8.5912	.180 80	4249.2	4881.9	8.5192
1200	.2718	4462.1	5141.7	8.8569	.226 52	4460.9	5140.5	8.7720	.194 15	4459.8	5139.3	8.7000
1300	.2905	4677.8	5404.0	9.0291	.242 06	4676.6	5402.8	8.9442	.207 49	4675.5	5401.7	8.8723

Table A.7 Superheated Steam Vapor Table (*Continued*)

T	v	u	h	s	v	u	h	s	v	u	h	s
	P = 4.0 MPa (250.40)				P = 4.5 MPa (257.49)				P = 5.0 MPa (263.99)			
Sat.	.049 78	2602.3	2801.4	6.0701	.044 06	2600.1	2798.3	6.0198	.039 44	2597.1	2794.3	5.9734
275	.054 57	2667.9	2886.2	6.2285	.047 30	2650.3	2863.2	6.1401	.041 41	2631.3	2838.3	6.0544
300	.058 84	2725.3	2960.7	6.3615	.051 35	2712.0	2943.1	6.2828	.045 32	2698.0	2924.5	6.2084
350	.066 45	2826.7	3092.5	6.5821	.058 40	2817.8	3080.6	6.5131	.051 94	2808.7	3068.4	6.4493
400	.073 41	2919.9	3213.6	6.7690	.064 75	2913.3	3204.7	6.7047	.057 81	2906.6	3195.7	6.6459
450	.080 02	3010.2	3330.3	6.9363	.070 74	3005.0	3323.3	6.8746	.063 30	2999.7	3316.2	6.8186
500	.086 43	3099.5	3445.3	7.0901	.076 51	3095.3	3439.6	7.0301	.068 57	3091.0	3433.8	6.9759
600	.098 85	3279.1	3674.4	7.3688	.087 65	3276.0	3670.5	7.3110	.078 69	3273.0	3666.5	7.2589
700	.110 95	3462.1	3905.9	7.6198	.098 47	3459.9	3903.0	7.5631	.088 49	3457.6	3900.1	7.5122
800	.122 87	3650.0	4141.5	7.8502	.109 11	3648.3	4139.3	7.7942	.098 11	3646.6	4137.1	7.7440
900	.134 69	3843.6	4382.3	8.0647	.119 65	3842.2	4380.6	8.0091	.107 62	3840.7	4378.8	7.9593
1000	.146 45	4042.9	4628.7	8.2662	.130 13	4041.6	4627.2	8.2108	.117 07	4040.4	4625.7	8.1612
1100	.158 17	4248.0	4880.6	8.4567	.140 56	4246.8	4879.3	8.4015	.126 48	4245.6	4878.0	8.3520
1200	.169 87	4458.6	5138.1	8.6376	.150 98	4457.5	5136.9	8.5825	.135 87	4456.3	5135.7	8.5331
1300	.181 56	4674.3	5400.5	8.8100	.161 39	4673.1	5399.4	8.7549	.145 26	4672.0	5398.2	8.7055
	P = 6.0 MPa (275.64)				P = 7.0 MPa (285.88)				P = 8.0 MPa (295.06)			
Sat.	.032 44	2589.7	2784.3	5.8892	.027 37	2580.5	2772.1	5.8133	.023 52	2569.8	2758.0	5.743
300	.036 16	2667.2	2884.2	6.0674	.029 47	2632.2	2838.4	5.9305	.024 26	2590.9	2785.0	5.790
350	.042 23	2789.6	3043.0	6.3335	.035 24	2769.4	3016.0	6.2283	.029 95	2747.7	2987.3	6.130
400	.047 39	2892.9	3177.2	6.5408	.039 93	2878.6	3158.1	6.4478	.034 32	2863.8	3138.3	6.363
450	.052 14	2988.9	3301.8	6.7193	.044 16	2978.0	3287.1	6.6327	.038 17	2966.7	3272.0	6.555
500	.056 65	3082.2	3422.2	6.8803	.048 14	3073.4	3410.3	6.7975	.041 75	3064.3	3398.3	6.724
550	.061 01	3174.6	3540.6	7.0288	.051 95	3167.2	3530.9	6.9486	.045 16	3159.8	3521.0	6.877
600	.065 25	3266.9	3658.4	7.1677	.055 65	3260.7	3650.3	7.0894	.048 45	3254.4	3642.0	7.020
	P = 6.0 MPa (275.64)				P = 7.0 MPa (285.88)				P = 8.0 MPa (295.06)			
700	.073 52	3453.1	3894.2	7.4234	.062 83	3448.5	3888.3	7.3476	.054 81	3443.9	3882.4	7.281
800	.081 60	3643.1	4132.7	7.6566	.069 81	3639.5	4128.2	7.5822	.060 97	3636.0	4123.8	7.517
900	.089 58	3837.8	4375.3	7.8727	.076 69	3835.0	4371.8	7.7991	.067 02	3832.1	4368.3	7.735
1000	.097 49	4037.8	4622.7	8.0751	.083 50	4035.3	4619.8	8.0020	.073.01	4032.8	4616.9	7.938
1100	.105 36	4243.3	4875.4	8.2661	.090 27	4240.9	4872.8	8.1933	.078 96	4238.6	4870.3	8.130
1200	.113 21	4454.0	5133.3	8.4474	.097 03	4451.7	5130.9	8.3747	.084 89	4449.5	5128.5	8.311
1300	.121 06	4669.6	5396.0	8.6199	.103 77	4667.3	5393.7	8.5473	.090 80	4665.0	5391.5	8.484
	P = 9.0 MPa (303.40)				P = 10.0 MPa (311.06)				P = 12.5 MPa (327.89)			
Sat.	.020 48	2557.8	2742.1	5.6772	.018 026	2544.4	2724.7	5.6141	.013 495	2505.1	2673.8	5.462
325	.023 27	2646.6	2856.0	5.8712	.019 861	2610.4	2809.1	5.7568				
350	.025 80	2724.4	2956.6	6.0361	.022 42	2699.2	2923.4	5.9443	.016 126	2624.6	2826.2	5.711
400	.029 93	2848.4	3117.8	6.2854	.026 41	2832.4	3096.5	6.2120	.020 00	2789.3	3039.3	6.041
450	.033 50	2955.2	3256.6	6.4844	.029 75	2943.4	3240.9	6.4190	.022 99	2912.5	3199.8	6.271
500	.036 77	3055.2	3386.1	6.6576	.032 79	3045.8	3373.7	6.5966	.025 60	3021.7	3341.8	6.461
550	.039 87	3152.2	3511.0	6.8142	.035 64	3144.6	3500.9	6.7561	.028 01	3125.0	3475.2	6.629
600	.042 85	3248.1	3633.7	6.9589	.038 37	3241.7	3625.3	6.9029	.030 29	3225.4	3604.0	6.781
650	.045 74	3343.6	3755.3	7.0943	.041 01	3338.2	3748.2	7.0398	.032 48	3324.4	3730.4	6.921
700	.048 57	3439.3	3876.5	7.2221	.043 58	3434.7	3870.5	7.1687	.034 60	3422.9	3855.3	7.055
800	.054 09	3632.5	4119.3	7.4596	.048 59	3628.9	4114.8	7.4077	.038 69	3620.0	4103.6	7.296
900	.059 50	3829.2	4364.8	7.6783	.053 49	3826.3	4361.2	7.6272	.042 67	3819.1	4352.5	7.518
1000	.064 85	4030.3	4614.0	7.8821	.058 32	4027.8	4611.0	7.8315	.046 58	4021.6	4603.8	7.725
1100	.070 16	4236.3	4867.7	8.0740	.063 12	4234.0	4865.1	8.0237	.050 45	4228.2	4858.8	7.91
1200	.075 44	4447.2	5126.2	8.2556	.067 89	4444.9	5123.8	8.2055	.054 30	4439.3	5118.0	8.09
1300	.080 72	4662.7	5389.2	8.4284	.072 65	4460.5	5387.0	8.3783	.058 13	4654.8	5381.4	8.27

PAGE 3/4

ME 265 / IPE

= 6 =

ME 265/IPE

=7=

Table A.7 Superheated Steam Vapor Table (*Continued*)

T	v	u	h	s	v	u	h	s	v	u	h	s
	P = 15.0 MPa (342.24)				P = 17.5 MPa (354.75)				P = 20.0 MPa (365.81)			
Sat.	.010 337	2455.5	2610.5	5.3098	.007 920	2390.2	2528.8	5.1419	.005 834	2293.0	2409.7	4.9269
350	.011 470	2520.4	2692.4	5.4421								
400	.015 649	2740.7	2975.5	5.8811	.012 447	2685.0	2902.9	5.7213	.009 942	2619.3	2818.1	5.5540
450	.018 445	2879.5	3156.2	6.1404	.015 174	2844.2	3109.7	6.0184	.012 695	2806.2	3060.1	5.9017
500	.020 80	2996.6	3308.6	6.3443	.017 358	2970.3	3274.1	6.2383	.014 768	2942.9	3238.2	6.1401
550	.022 93	3104.7	3448.6	6.5199	.019 288	3083.9	3421.4	6.4230	.016 555	3062.4	3393.5	6.3348
600	.024 91	3208.6	3582.3	6.6776	.021 06	3191.5	3560.1	6.5866	.018 178	3174.0	3537.6	6.5048
650	.026 80	3310.3	3712.3	6.8224	.022 74	3296.0	3693.9	6.7357	.019 693	3281.4	3675.3	6.6582
700	.028 61	3410.9	3840.1	6.9572	.024 34	3398.7	3824.6	6.8736	.021 13	3386.4	3809.0	6.7993
800	.032 10	3610.9	4092.4	7.2040	.027 38	3601.8	4081.1	7.1244	.023 85	3592.7	4069.7	7.0544
900	.035 46	3811.9	4343.8	7.4279	.030 31	3804.7	4335.1	7.3507	.026 45	3797.5	4326.4	7.2830
1000	.038 75	4015.4	4596.6	7.6348	.033 16	4009.3	4589.5	7.5589	.028 97	4003.1	4582.5	7.4925
1100	.042 00	4222.6	4852.6	7.8283	.035 97	4216.9	4846.4	7.7531	.031 45	4211.3	4840.2	7.6874
1200	.045 23	4433.8	5112.3	8.0108	.038 76	4428.3	5106.6	7.9360	.033 91	4422.8	5101.0	7.8707
1300	.048 45	4649.1	5376.0	8.1840	.041 54	4643.5	5370.5	8.1093	.036 36	4638.0	5365.1	8.0442
	P = 25.0 MPa				P = 30.0 MPa				P = 35.0 MPa			
375	.001 973 1	1798.7	1848.0	4.0320	.001 789 2	1737.8	1791.5	3.9305	.001 700 3	1702.9	1762.4	3.8722
400	.006 004	2430.1	2580.2	5.1418	.002 790	2067.4	2151.1	4.4728	.002 100	1914.1	1987.6	4.2126
425	.007 881	2609.2	2806.3	5.4723	.005 303	2455.1	2614.2	5.1504	.003 428	2253.4	2373.4	4.7747
450	.009 162	2720.7	2949.7	5.6744	.006 735	2619.3	2821.4	5.4424	.004 961	2498.7	2672.4	5.1962
500	.011 123	2884.3	3162.4	5.9592	.008 678	2820.7	3081.1	5.7905	.006 927	2751.9	2994.4	5.6282
550	.012 724	3017.5	3335.6	6.1765	.010 168	2970.3	3275.4	6.0342	.008 345	2921.0	3213.0	5.9026
600	.014 137	3137.9	3491.4	6.3602	.011 446	3100.5	3443.9	6.2331	.009 527	3062.0	3395.5	6.1179
650	.015 433	3251.6	3637.4	6.5229	.012 596	3221.0	3598.9	6.4058	.010 575	3189.8	3559.9	6.3010
	P = 25.0 MPa				P = 30.0 MPa				P = 35.0 MPa			
700	.016 646	3361.3	3777.5	6.6707	.013 661	3335.8	3745.6	6.5606	.011 533	3309.8	3713.5	6.4631
800	.018 912	3574.3	4047.1	6.9345	.015 623	3555.5	4024.2	6.8332	.013 278	3536.7	4001.5	6.7450
900	.021 045	3783.0	4309.1	7.1680	.017 448	3768.5	4291.9	7.0718	.014 883	3754.0	4274.9	6.9886
1000	.023 10	3990.9	4568.5	7.3802	.019 196	3978.8	4554.7	7.2867	.016 410	3966.7	4541.1	7.2064
1100	.025 12	4200.2	4828.2	7.5765	.020 903	4189.2	4816.3	7.4845	.017 895	4178.3	4804.6	7.4057
1200	.027 11	4412.0	5089.9	7.7605	.022 589	4401.3	5079.0	7.6692	.019 360	4390.7	5068.3	7.5910
1300	.029 10	4626.9	5354.4	7.9342	.024 266	4616.0	5344.0	7.8432	.020 815	4605.1	5333.6	7.7653
	P = 40.0 MPa				P = 50.0 MPa				P = 60.0 MPa			
375	.001 640 7	1677.1	1742.8	3.8290	.001 559 4	1638.6	1716.6	3.7639	.001 502 8	1609.4	1699.5	3.7141
400	.001 907 7	1854.6	1930.9	4.1135	.001 730 9	1788.1	1874.6	4.0031	.001 633 5	1745.4	1843.4	3.9318
425	.002 532	2096.9	2198.1	4.5029	.002 007	1959.7	2060.0	4.2734	.001 816 5	1892.7	2001.7	4.1626
450	.003 693	2365.1	2512.8	4.9459	.002 486	2159.6	2284.0	4.5884	.002 085	2053.9	2179.0	4.4121
500	.005 622	2678.4	2903.3	5.4700	.003 892	2525.5	2720.1	5.1726	.002 956	2390.6	2567.9	4.9321
550	.006 984	2869.7	3149.1	5.7785	.005 118	2763.6	3019.5	5.5485	.003 956	2658.8	2896.2	5.3441
600	.008 094	3022.6	3346.4	6.0114	.006 112	2942.0	3247.6	5.8178	.004 834	2861.1	3151.2	5.6452
650	.009 063	3158.0	3520.6	6.2054	.006 966	3093.5	3441.8	6.0342	.005 595	3028.8	3364.5	5.8829
700	.009 941	3283.6	3681.2	6.3750	.007 727	3230.5	3616.8	6.2189	.006 272	3177.2	3553.5	6.0824
800	.011 523	3517.8	3978.7	6.6662	.009 076	3479.8	3933.6	6.5290	.007 459	3441.5	3889.1	6.4109
900	.012 962	3739.4	4257.9	6.9150	.010 283	3710.3	4224.4	6.7882	.008 508	3681.0	4191.5	6.6805
1000	.014 324	3954.6	4527.6	7.1356	.011 411	3930.5	4501.1	7.0146	.009 480	3906.4	4475.2	6.9127
1100	.015 642	4167.4	4793.1	7.3364	.012 496	4145.7	4770.5	7.2184	.010 409	4124.1	4748.6	7.1195
1200	.016 940	4380.1	5057.7	7.5224	.013 561	4359.1	5037.2	7.4058	.011 317	4338.2	5017.2	7.3083
1300	.018 229	4594.3	5323.5	7.6969	.014 616	4572.8	5303.6	7.5808	.012 215	4551.4	5284.3	7.4837

SOURCE: Reproduced from Joseph H. Keenan, Frederick G. Keyes, Philip G. Hill, and Joan G. Moore, *Steam Tables* (New York: John Wiley & Sons, Inc., 1969) with permission.

Table A.8 Compressed Liquid Table

T	v	u	h	s	v	u	h	s	v	u	h	s
	P = 5 MPa (263.99)				P = 10 MPa (311.06)				P = 15 MPa (342.24)			
Sat.	.001 285 9	1147.8	1154.2	2.9202	.001 452 4	1393.0	1407.6	3.3596	.001 658 1	1585.6	1610.5	3.6848
0	.000 997 7	.04	5.04	.0001	.000 995 2	.09	10.04	.0002	.000 992 8	.15	15.05	.0004
20	.000 999 5	83.65	88.65	.2956	.000 997 2	83.36	93.33	.2945	.000 995 0	83.06	97.99	.2934
40	.001 005 6	166.95	171.97	.5705	.001 003 4	166.35	176.38	.5686	.001 001 3	165.76	180.78	.5666
60	.001 014 9	250.23	255.30	.8285	.001 012 7	249.36	259.49	.8258	.001 010 5	248.51	263.67	.8232
80	.001 026 8	333.72	338.85	1.0720	.001 024 5	332.59	342.83	1.0688	.001 022 2	331.48	346.81	1.0656
100	.001 041 0	417.52	422.72	1.3030	.001 038 5	416.12	426.50	1.2992	.001 036 1	414.74	430.28	1.2955
120	.001 057 6	501.80	507.09	1.5233	.001 054 9	500.08	510.64	1.5189	.001 052 2	498.40	514.19	1.5145
140	.001 076 8	586.76	592.15	1.7343	.001 073 7	584.68	595.42	1.7292	.001 070 7	582.66	598.72	1.7242
160	.001 098 8	672.62	678.12	1.9375	.001 095 3	670.13	681.08	1.9317	.001 091 8	667.71	684.09	1.9260
180	.001 124 0	759.63	765.25	2.1341	.001 119 9	756.65	767.84	2.1275	.001 115 9	753.76	770.50	2.1210
200	.001 153 0	848.1	853.9	2.3255	.001 148 0	844.5	856.0	2.3178	.001 143 3	841.0	858.2	2.3104
220	.001 186 6	938.4	944.4	2.5128	.001 180 5	934.1	945.9	2.5039	.001 174 8	929.9	947.5	2.4953
240	.001 226 4	1031.4	1037.5	2.6979	.001 218.7	1026.0	1038.1	2.6872	.001 211 4	1020.8	1039.0	2.6771
260	.001 274 9	1127.9	1134.3	2.8830	.001 264 5	1121.1	1133.7	2.8699	.001 255 0	1114.6	1133.4	2.8576
280					.001 321 6	1220.9	1234.1	3.0548	.001 308 4	1212.5	1232.1	3.0393
300					.001 397 2	1328.4	1342.3	3.2469	.001 377 0	1316.6	1337.3	3.2260
320									.001 472 4	1431.1	1453.2	3.4247
340									.001 631 1	1567.5	1591.9	3.6546

T	v	u	h	s	v	u	h	s	v	u	h	s
	P = 20 MPa (365.81)				P = 30 MPa				P = 50 MPa			
Sat.	.002 036	1785.6	1826.3	4.0139								
0	.000 990 4	.19	20.01	.0004	.000 985 6	.25	29.82	.0001	.000 976 6	.20	49.03	.0014
20	.000 992 8	82.77	102.62	.2923	.000 988 6	82.17	111.84	.2899	.000 980.4	81.00	130.02	.2848
40	.000 999 2	165.17	185.16	.5646	.000 995 1	164.04	193.89	.5607	.000 987 2	161.86	211.21	.5527
60	.001 008 4	247.68	267.85	.8206	.001 004 2	246.06	276.19	.8154	.000 996 2	242.98	292.79	.8052
80	.001 019 9	330.40	350.80	1.0624	.001 015 6	328.30	358.77	1.0561	.001 007 3	324.34	374.70	1.0440
100	.001 033 7	413.39	434.06	1.2917	.001 029 0	410.78	441.66	1.2844	.001 020 1	405.88	456.89	1.2705
120	.001 049 6	496.76	517.76	1.5102	.001 044 5	493.59	524.93	1.5018	.001 034 8	487.65	539.39	1.4857
140	.001 067 8	580.69	602.04	1.7193	.001 062 1	576.88	608.75	1.7098	.001 051 5	569.77	622.35	1.6915
160	.001 088 5	665.35	687.12	1.9204	.001 082 1	660.82	693.28	1.9096	.001 070 3	652.41	705.92	1.8897
180	.001 112 0	750.95	773.20	2.1147	.001 104 7	745.59	778.73	2.1024	.001 091 2	735.69	790.25	2.0794
200	.001 138 8	837.7	860.5	2.3031	.001 130 2	831.4	865.3	2.2893	.001 114 6	819.7	875.5	2.2634
220	.001 169.3	925.9	949.3	2.4870	.001 159 0	918.3	953.1	2.4711	.001 140 8	904.7	961.7	2.4415
240	.001 204 6	1016.0	1040.0	2.6674	.001 192 0	1006.9	1042.6	2.6490	.001 170 2	990.7	1049.2	2.6151
260	.001 246 2	1108.6	1133.5	2.8459	.001 230 3	1097.4	1134.3	2.8243	.001 203 4	1078.1	1138.2	2.7866
280	.001 296 5	1204.7	1230.6	3.0248	.001 275 5	1190.7	1229.0	2.9986	.001 241 5	1167.2	1229.3	2.9537
300	.001 359 6	1306.1	1333.3	3.2071	.001 330 4	1287.9	1327.8	3.1741	.001 286 0	1258.7	1323.0	3.1200
320	.001 443 7	1415.7	1444.6	3.3979	.001 399 7	1390.7	1432.7	3.3539	.001 338 8	1353.3	1420.2	3.2863
340	.001 568 4	1539.7	1571.0	3.6075	.001 492 0	1501.7	1546.5	3.5426	.001 403 2	1452.0	1522.1	3.4557
360	.001 822 6	1702.8	1739.3	3.8772	.001 626 5	1626.6	1675.4	3.7494	.001 483 8	1556.0	1630.2	3.6298
380					.001 869 1	1781.4	1837.5	4.0012	.001 588 4	1667.2	1746.6	3.8108

SOURCE: Reproduced from Joseph H. Keenan, Frederick G. Keyes, Philip G. Hill, and Joan G. Moore, *Steam Tables* (New York: John Wiley & Sons, Inc., 1969) with permission.

PAGE 4/4

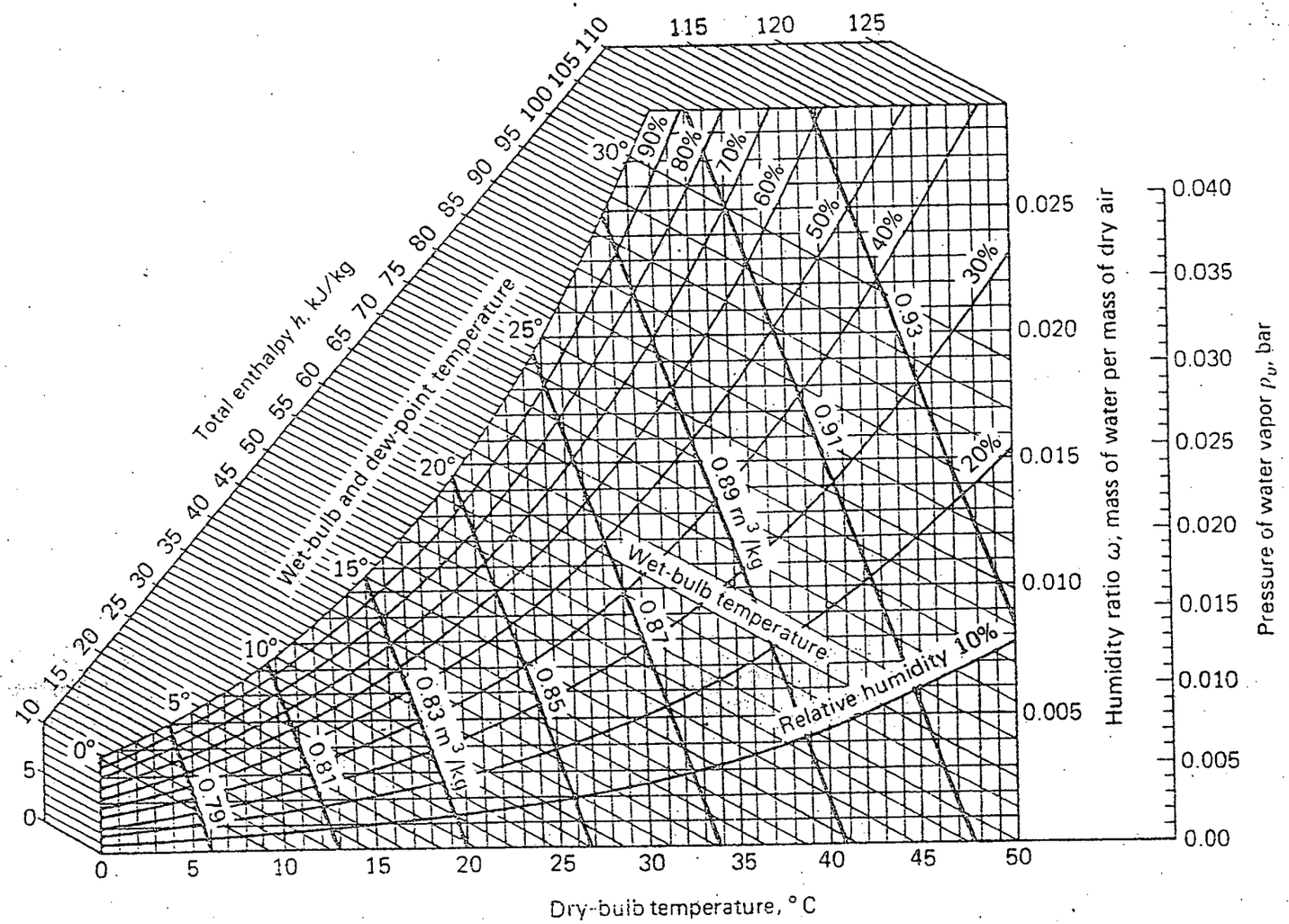

FIGURE A-25M
Psychrometric chart, metric units, barometric pressure 1.01 bars.

L-2/T-2/IPE **Date : 21/01/2017**

BANGLADESH UNIVERSITY OF ENGINEERING AND TECHNOLOGY, DHAKA

L-2/T-2 B. Sc. Engineering Examinations 2015-2016

Sub : **ME 243** (Mechanics of Solids)

Full Marks: 210 Time : 3 Hours

USE SEPARATE SCRIPTS FOR EACH SECTION

The figures in the margin indicate full marks.

SECTION – A

There are **FOUR** questions in this section. Answer any **THREE**.

1. (a) The rigid platform as shown in Fig. for Q. No. 1(a) has negligible mass and rests on two steel bars, each 250 mm long. Compute the stress in the aluminum bar after the center load P = 400 kN has been applied. For each steel bar, the area is 1200 mm^2 and E = 200 GPa. For the aluminum bar, the area is 2400 mm^2 and E = 70 GPa. **(18)**

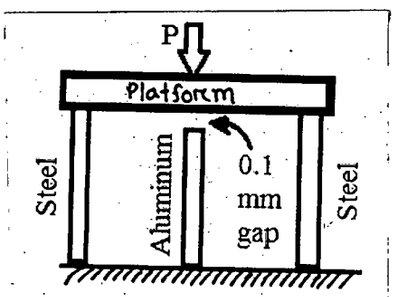

Figure for question No: 1(a)

(b) A metal plate of thickness 10 mm is bolted on another metal plate of 15 mm thickness as shown in figure 1(b). Diameter of all bolts is 5 mm. If the joint is subjected to a tensile load of 10 kN, find different stresses in the plates and bolts. All dimensions are given in mm. **(17)**

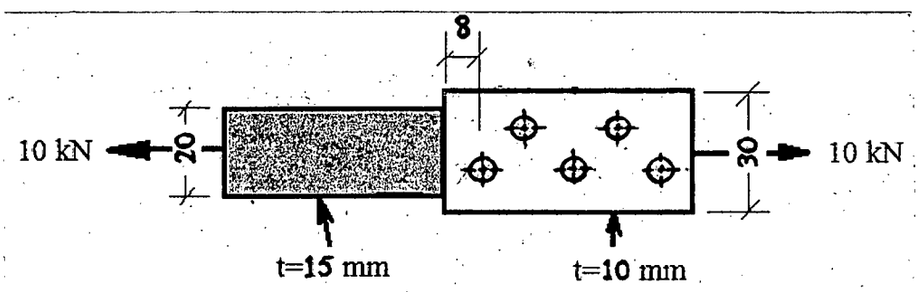

Figure for question No: 1(b)

2. A column of rectangular cross section (300 mm × 200 mm) has a length of 6 m. The column in made of steel (σ_y = 400 MPa, E = 200 GPa) and the end conditions are one end fixed and other end free. **(35)**

Contd P/2

ME 243/IPE

Contd... Q. No. 2

(a) Considering a factor of safety N=3 determine the maximum load that the column can withstand.

(b) If the length of the column is reduced by 50% then calculate the percentage change in maximum allowable load (N=3).

(c) If another column is made by the same material with same conditions (length 6 m) but in a circular cross section then determine the least diameter of the column that can support the same amount of load (as calculated in (i)). If the cost of the material is 5000 Tk/m^3 then find percentage change in costing.

3. (a) For the stress component on an elementary area shown in figure 3(a) determine the (i) Principal plane and principal stresses. (ii) Value of maximum shear stress and plane of maximum shear stress. (iii) Stress components along the plane at +30° with x-axis and draw the stress components. **(17)**

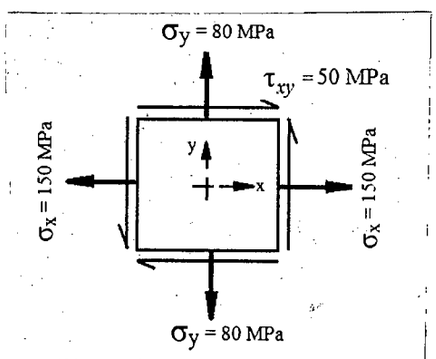

Figure for question No: 3(a)

(b) For the elementary area "A" shown in figure 3(b) draw the stress components on a 2D plane. Then determine the diameter of the rod if the yield strength of the rod material is 400 MPa using (i) maximum normal stress theory (ii) maximum shear stress theory (iii) distortion energy theory. **(17)**

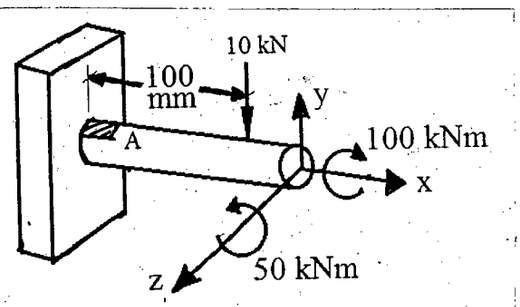

Figure for question No: 3(b)

ME 243/IPE

4. (a) Two concentric springs have diameter of 10 mm and 75 mm. The wire diameter is 12 mm for outer spring and 6 mm for inner spring. If they are subjected to an axial compressive load of 500 N, find maximum stress developed in each spring. The ratio of active turns of the outer to inner spring is 1.5:1. **(17)**

(b) A compound shaft is attached to rigid supports as shown in figure 4(b). The limiting shear stress for bronze and steel are 250 MPa and 400 MPa. Determine the diameter of each segment so that each material simultaneously will be stressed to its limiting value when a torque of 100 kNm is applied. For bronze G = 40 GPa and for steel G = 80 GPa. **(18)**

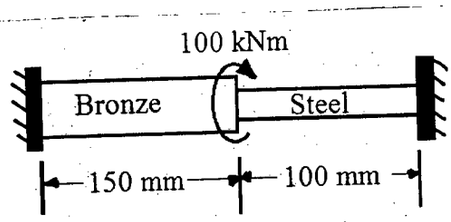

Figure for question No: 4(b).

SECTION – B

There are **FOUR** questions in this section. Answer any **THREE**.

Notations have their usual meaning.

5. (a) Write the equations shear force and bending moment for a simply supported beam subjected to a uniformly distributed load of 15 kN/m over its entire length and a concentrated load of 40 kN as shown in Fig. 5(a). Draw also the shear force and bending moment diagrams. **(17)**

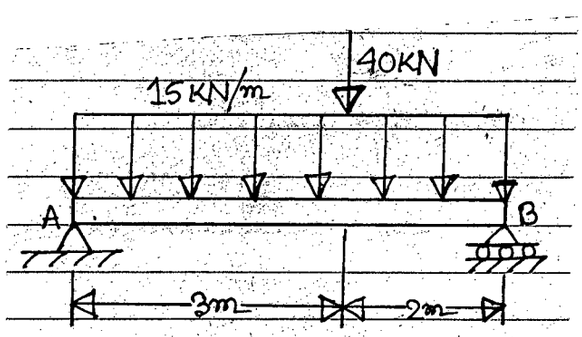

Fig. 5(a)

ME 243/IPE

Contd... Q. No. 2

(b) A simply supported beam of cross-section 50 mm × 100 mm is subjected to a couple of 6 kNm and a concentrated load of 5 kN as shown in Fig. 5(b). Find the maximum flexure stress and the maximum shearing stress developed in the beam. **(18)**

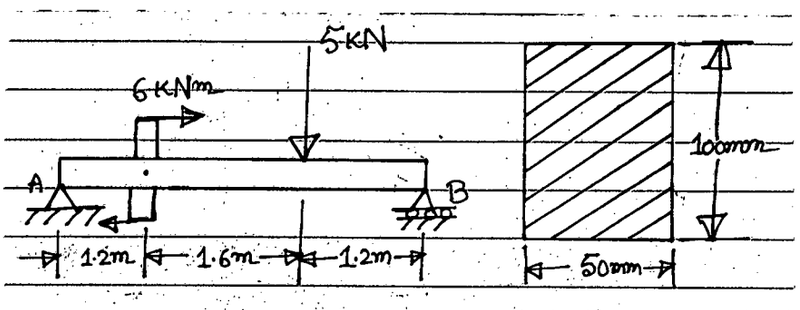

Fig. 5(b)

6. (a) A cantilever beam of length L is subjected to a couple M_0 as shown in Fig. 6(a). Using double integration method, determine the equations of elastic curve of the beam and an expression of maximum deflection. **(17)**

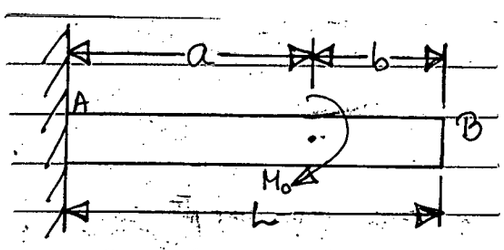

Fig. 6(a)

(b) Using area moment method, find an expression for maximum deflection of a cantilever beam of length L subjected to three equal concentrated loads P as shown in Fig. 6(b). **(18)**

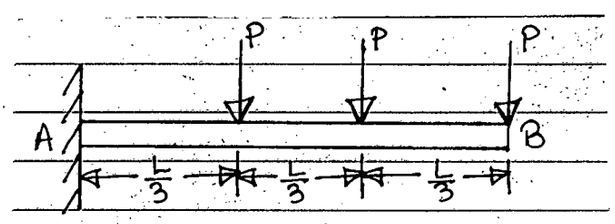

Fig. 6(b)

ME 243/IPE

7. (a) The split ring as shown in Fig. 7(a) has circular cross-section of 30 mm diameter, knowing that each of 2.5 kN loads is applied at the centroid of the cross-section, determine the stresses at the points A and B. **(20)**

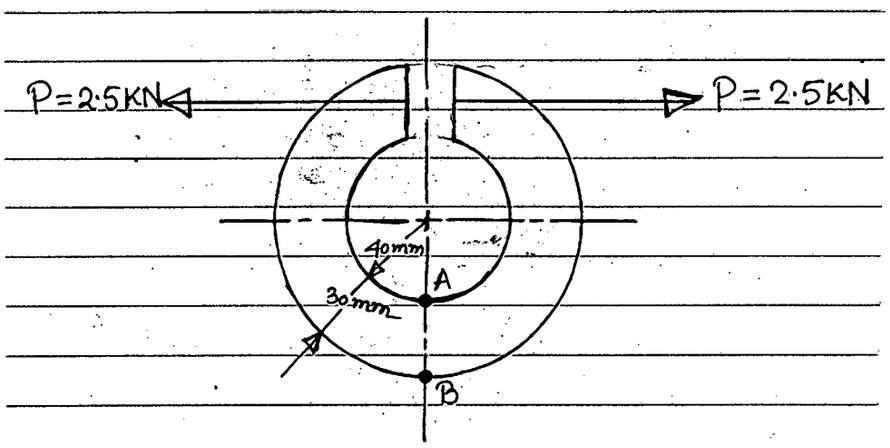

Fig. 7(a)

(b) Determine the maximum resisting moment applicable to the beam shown in Fig. 7(b). The stress in wood and steel must be kept lower than or equal to 10 MPa and 150 MPa respectively. Assume, n = 20. **(15)**

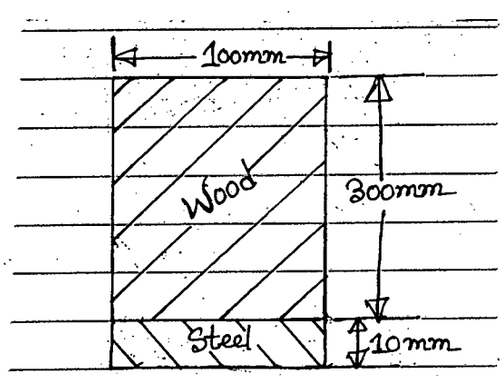

Fig. 7(b)

8. (a) A cylindrical pressure vessel is fabricated from the steel plate of thickness 10 mm. If the length and internal diameter of the pressure vessel are respectively 2.5 m and 500 mm, determine the maximum internal pressure that can be applied. Circumferential stress is limited to 80 MPa and longitudinal stress is limited to 100 MPa. **(15)**

Contd P/6

ME 243/IPE

Contd... Q. No. 8

(b) A long horizontal concrete pipe of internal diameter d_i = 1 m is submerged in water at a depth of 40 m below the water surface as shown in Fig. 8(b). If the allowable stress in compression for concrete is 1.5 MPa, determine the wall thickness of the cylinder assuming uniform distribution of pressure outside the cylinder. Consider thick walled cylinder and neglect atmospheric pressure. **(20)**

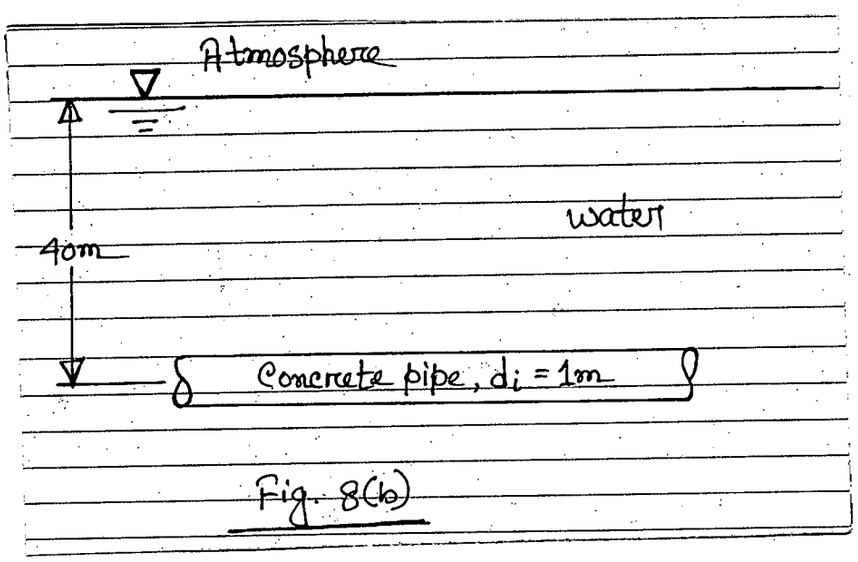

Fig. 8(b)

L-2/T-2/IPE **Date : 25/01/2017**

BANGLADESH UNIVERSITY OF ENGINEERING AND TECHNOLOGY, DHAKA

L-2/T-2 B. Sc. Engineering Examinations 2015-2016

Sub : **IPE 209** (Engineering Economy)

Full Marks: 140 Time : 3 Hours

USE SEPARATE SCRIPTS FOR EACH SECTION

The figures in the margin indicate full marks.

SECTION – A

There are **FOUR** questions in this section. Answer any **THREE**.

1. (a) A bond with a face value of Tk. 100,000/- pays interest of 8% per year. This bond will be redeemed at par value at the end of its 20 years life, and the first interest payment is due one year from now. **(10)**

   (i) How much should be paid now for this bond in order to get yield of 15% per year on the investment?

   (ii) If this bond is purchased now for Tk. 90,000/- what annual yield would the buyer receive?

   (b) Why is MARR important for project evaluation? Briefly explain. **(4)**

   (c) A capital investment of Tk. 1,000,000 can be made in a project that will produce a uniform annual revenue of Tk. 150,000 for five years and then have a salvage value of Tk. 200,000. Annual expenses will be Tk. 50,000. The company is willing to accept any project that will earn 10% per year, before income tax, on all invested capital. Determine whether it is acceptable by IRR method. **(9⅓)**

2. (a) List few names of methods for economic evaluation of projects. Which one is the most widely used method among them? Describe few difficulties of using IRR method for project evaluation. **(7)**

   (b) A piece of new equipment has been proposed by engineers to increase the productivity of a certain manual welding operation. The investment cost is Tk. 2,500,000 and the equipment will have a market value of Tk. 500,000 at the end of study period. Increased productivity attributable to the equipment will amount to Tk. 800,000 per year after extra operating costs have been subtracted from the revenue generated by additional production. If the firm's MARR (before income taxes) is 20% per year, find the simple and discounted payback periods of this project. **(7)**

   (c) The following data have been estimated for two mutually exclusive projects A and B associated with small engineering project for which revenues as well as expenses are involved. They have useful lives of four and six years, respectively. If the MARR = 10% per year, find which alternative is more desirable by using PW and AW methods (use the repeatability assumptions). **(9⅓)**

Projects	A	B
Capital Investment (Tk)	350,000	500,000
Annual Revenue (Tk)	190,000	250,000
Annual Expenses (Tk)	64,500	102,000
Useful life (yr)	4	6
Market value at the end of useful life (Tk)	0	0

Contd P/2

IPE 209

3. (a) What are the basic requirements to classify a property as depreciable? **(3⅓)**

(b) The S. Karim Paribahan has decided to purchase a new bus for Tk. 8,500,000 with a trade-in of their old bus. The old bus has a Book Value (BV) of Tk. 1,000,000 at the time of their trade-in. The new bus will be kept for 10 years before being sold. Its estimated Salvage Value (SV) at that time is expected to be Tk. 500,000. Use Straight Line (SL) and DB method (R = 2/N i.e. 200% DB Method) to calculate the annual depreciation amounts. If MARR = 10% per year, which one of these two methods will be preferred by this firm? Explain why. **(10)**

(c) Acme purchased a pump for Tk. 25,000,000 and expended Tk. 2,000,000 for shipping and installation. The addition of this pump will result in an increase in revenue of Tk. 8,000,000 with associated increased expenses of Tk. 1,000,000, each year. The pump has a GDS recovery period of five years, and Acme's effective tax rate is 40%. Calculate BTCFs and ATCFs for this project for different years of service of the asset. **(10)**

4. (a) List some difficulties associated with evaluating public sector projects. Provide equations for conventional and modified B-C ratio with PW, AW. **(6)**

(b) The city of Columbia is considering extending the runways of its municipal airport so that commercial jets can use the facility. The land necessary for the runway extension is currently a farmland that can be purchased for $350,000. Construction costs for the runway extension are projected to be $600,000, and the additional annual maintenance costs for the extension are estimated to be $22,500. If the runways are extended, a small terminal will be constructed at a cost of $250,000. The annual operating and maintenance costs for the terminal are estimated at $75,000. Finally, the projected increase in flight will require the addition of two air traffic controllers at an annual cost of $100,000. Annual benefits of the runway extension have been estimated as follows: **(9⅓)**

$325,000 Rental receipts from airlines leasing space at the facility
$65,000 Airport tax charged to passengers
$50,000 Convenience benefit for residents of Columbia
$50,000 Additional tourism dollars for Columbia

Apply the B-C ratio method with a study period of 20 years and a MARR of 10% per year to determine whether the runways at Columbia Municipal Airport Should be extended.

(c) In addition to the benefits and costs, suppose that there are disbenefits associated with the runway extension project mentioned in question 4(b). Specifically, the increased noise level from commercial jet traffic will be a serious nuisance to homeowners living along the approach path to the Columbia Municipal Airport. The annual disbenefit to citizens of Columbia caused by this noise pollution is estimated to be $100,000. Given this additional information, reapply the conventional B-C ratio, with equivalent annual worth, to determine whether this disbenefit affects your recommendation on the desirability of this project. **(8)**

Contd P/3

IPE 209

SECTION-B

There are **FOUR** questions in this section. Answer any **THREE**.
Draw cash flow diagram whenever it is applicable.
The symbols *P, F, A, i & N* have their usual meaning.

5. (a) What are the seven principles of engineering economy? Briefly explain each of them. **(14)**

(b) Henry Ford's Model-T was originally designed and built to run on ethanol. Today, ethanol (190-proof alcohol) can be produced with domestic stills for about \$0.85 per gallon. When blended with gasoline costing \$4.00 per gallon, a 20% ethanol and 80% gasoline mixture costs \$3.37 per gallon. Assume fuel consumption at 25 mpg and engine performance in general are not adversely affected with this 20-80 blend (called E20). **(9 ⅓)**

(i) How much money can be saved for 15,000 miles of driving per year?

(ii) How much gasoline per year is being converted if one million people use the E20 fuel?

6. (a) Write short notes on the following terms: **(6)**

(i) Opportunity cost

(ii) Life cycle cost

(iii) Breakeven point.

(b) A large wood products company is negotiating a contract to sell plywood overseas. The fixed cost that can be allocated to the production of plywood is \$800,000 per month. The variable cost per thousand board feet is \$155.50. The price charged will be determined by $p = \$600 - (0.5)D$ per 1,000 board feet. **(8 ⅓)**

(i) For this situation, determine the optimal monthly sales volume for this product and calculate the profit (or loss) at the optimal volume.

(ii) What is the domain of profitable demand during a month?

(c) A municipal solid-waste site for a city must be located at Site A or Site B. After sorting, some of the solid refuse will be transported to an electric power plant where it will be used as fuel. Data for the hauling of refuse from each site to the power plant are shown in the following table: **(9)**

	Site A	**Site B**
Average hauling distance	4 miles	3 miles
Annual rental fee for solid-waste site	\$5,000	\$100,000
Hauling cost	\$1.50/yd^3-mile	\$1.50/yd^3-mile

The power plant will pay \$8.00 per cubic yard of sorted solid waste delivered to the plant. Use the city's viewpoint and assume that 200,000 cubic yards of refuse will be hauled to the plant for one year only. If only one site has to be selected, find where the solid-waste should site be located?

Contd P/4

IPE 209

7. (a) Why is time value of money important to evaluate engineering projects? Briefly explain. **(5⅓)**

(b) Derive the relationship to find future worth, (F) when annuity (A) is given. i.e. $F = A(F/A, i\%, N)$ **(7)**

(c) Henrie's Drapery Service is investigating the purchase of a new machine for cleaning and blocking drapes. The machine would cost $130,000, including freight and installation. Henrie's has estimated that the new machine would increase the company's cash inflows, net of expenses, by $25,000 per year. The machine would have a 10-year useful life and no salvage value. **(11)**

(i) Compute the machine's internal rate of return to the nearest whole percent.

(ii) Compute the machine's net present value. Use a interest rate of 12%.

(iii) Suppose that the new machine would increase the company's annual cash inflows, net of expenses, by only $22,500 per year. Under these conditions, compute the internal rate of return to the nearest whole percent.

8. (a) The Midtown Cafeteria employs five people to operate antiquatd dishwashing equipment. The cost of wages for these people and for maintenance of the equipment is $85,000 per year. Management is considering the purchase of a single, highly automated dishwashing machine that would cost $140,000 and have a useful life of 12 years. This machine would require the services of only three people to operate at a cost of $48,000 per year. A maintenance contract on the machine would cost an additional $2,000 per year. New water jets would be needed on the machine in six years at a total cost of $15,000. The old equipment is fully depreciated and has no resale value. The new machine will have a salvage value of $9,000 at the end of its 12-year useful life. Use an interest rate of 14%. **(13⅓)**

Required:

(i) Determine the net annual cost savings that the new dishwashing machine will provide.

(ii) Compute the new dishwashing machine's net present value. Round all dollar amounts to the nearest whole dollar. Would you recommend that it be purchased?

(b) Maintenance expenses for a bridge on the Ohio River are estimated to be $20,000 per year for the first 8 years, followed by two separate $100,000 expenditures in years 12 and 18. The expected life of the bridge is 30 years. If i = 6% per year, what is the equivalent uniform annual expense over the entire 30-year period? **(10)**

L-2/T-2/IPE **Date : 30/01/2017**

BANGLADESH UNIVERSITY OF ENGINEERING AND TECHNOLOGY, DHAKA

L-2/T-2 B. Sc. Engineering Examinations 2015-2016

Sub : **IPE 205** (Manufacturing Process I)

Full Marks: 210 Time : 3 Hours

The figures in the margin indicate full marks.

USE SEPARATE SCRIPTS FOR EACH SECTION

SECTION – A

There are **FOUR** questions in this section. Answer any **THREE**.

1. (a) Discuss the techniques for strengthening and treatment of glass. **(10)**

   (b) Explain why powder metallurgy has become highly competitive with casting, forging and machining processes. **(10)**

   (c) Write short notes on:. **(15)**

   (i) Isostatic pressing (ii) Metal injection molding (iii) Sintering

2. (a) Describe different types of Spot Welding Methods with necessary sketches. **(8)**

   (b) What are the similarities and differences between shielded metal arc welding and submerged arc welding process? **(7)**

   (c) Compare soldering, brazing and welding. **(10)**

   (d) A resistance spot welding operation is performed on two pieces of 0.040 in thick sheet steel (low carbon). The unit melting energy for steel = 150 Btu/in^3. Process parameters are: current = 9500 A and time duration = 0.17 sec. This results in a weld nugget of diameter = 0.19 in and thickness = 0.060 in. Assume the resistance = 100 micro-ohms. Determine: (i) the average power density in the interface area defined by the weld nugget, and (ii) the proportion of energy generated that went into formation of the weld nugget. **(10)**

3. (a) Explain how constant arc length can be maintained during gas metal arc welding. **(5)**

   (b) Why inadequate joint penetration, slag inclusions and incomplete fusion are occurred in welds and how these defects can be removed or controlled? **(10)**

   (c) Why proper heat balance during welding is necessary and how proper heat balance in spot welding can be achieved? **(10)**

   (d) How different types of seams can be produced in welding? **(10)**

4. (a) Explain percussion welding with the help of a neat sketch. **(10)**

   (b) With necessary sketches describe briefly the working principle of **(15)**

   (i) TIG Welding

   (ii) Electron Beam Welding

   (c) A continuous weld is to be made around the circumference of a round steel tube of diameter = 6.0 ft, using a submerged arc welding operation under automatic control at a voltage of 25 volts and current of 300 amps. The tube is slowly rotated under a stationary welding head. The heat transfer efficiency of SAW is $f_1 = 0.95$ and the assumed melting efficiency $f_2 = 0.7$. The cross-sectional area of the weld bead is 0.12 in^2. If the unit melting energy for the steel = 150 Btu/in^3, determine: (i) the rotational speed of tube and (ii) the time required to complete the weld. **(10)**

Contd P/2

IPE 205

SECTION-B

There are **FOUR** questions in this section. Answer any **THREE**.

5. (a) "Casting is the most versatile, flexible and cheapest manufacturing process" — explain briefly with some suitable examples. **(8)**

(b) With the help of suitable diagrams, discuss (i) Gravity die casting, (ii) Centrifugal casting and (iii) Squeeze casting. **(15)**

(c) Briefly describe, with the help of suitable diagrams, the different types of casting defect in sand casting. How might defective castings be repaired to permit successful use in their intended application? **(12)**

6. (a) Why is the control of volume of the blank important in closed-die forging? What are advantages and limitations of a fleshless forging operation? **(6)**

(b) With the help of diagrams, describe (i) Heading, (ii) Ring forging and (iii) Metal ball forging. **(15)**

(c) With the help of simple diagrams, mention the various types of mechanical presses. Describe some of the primary differences between hydraulic presses and screw presses. **(7)**

(d) List some of the attractive features of the extrusion process. With the help of suitable diagrams, describe the various types of impact extrusion. **(7)**

7. (a) When making bends in sheet metal, what is the distinction between bending, forming and drawing? What type of operations can be performed on a press brake? **(5)**

(b) With the help of diagrams, describe (i) Beading and (ii) Bulging. **(10)**

(c) When comparing the hydro forming process with the deep-drawing process, it has been stated that deeper draws are possible in the former method. With appropriate sketches, explain why. **(5)**

(d) What is the purpose of incorporating an angle, or shear, on the surface of a punch? With the help of suitable diagrams, describe redrawing and explosive standoff technique forming processes. **(15)**

8. (a) From production viewpoint, what are some of the attractive characteristics of resistance welding? **(5)**

(b) Why depressions or indentation occurred during spot welding and how these depressions can be minimized? **(10)**

(c) Describe the working principle of thermit welding process with necessary sketches. **(10)**

(d) Write the advantages, disadvantages and applications of 'Projection Welding'. **(10)**