L-4/T-1/NAME **Date : 15/01/2017**

BANGLADESH UNIVERSITY OF ENGINEERING AND TECHNOLOGY, DHAKA

L-4/T-1 B. Sc. Engineering Examinations 2015-2016

Sub : **NAME 477** (Optimization Methods in Ship Design)

Full Marks: 210 Time : 3 Hours

USE SEPARATE SCRIPTS FOR EACH SECTION

The figures in the margin indicate full marks.

SECTION – A

There are **FOUR** questions in this section. Answer any **THREE**.

1. (a) Consider the following LP: **(15)**

Maximize $Z = 2x_1 + 4x_2 + 4x_3 - 3x_4$

Subject to

$x_1 + x_2 + x_3 = 4$

$x_1 + 4x_2 \quad + x_4 = 8$

$x_1, x_2, x_3, x_4 \geq 0$

The objective equation in the optimal tableau is

$z + 2x_1 + 0.x_2 + 0.x_3 + 3x_4 = 16$

Determine the associated optimal dual solution.

(b) Solve the problem by the dual simplex algorithm **(20)**

Minimize $z = 4x_1 + 2x_2$

Subject to

$x_1 + x_2 = 1$

$3x_1 - x_2 \geq 2$

$x_1, x_2 \geq 0$

2. (a) Consider the problem **(15)**

Minimize $z = f(x)$

Subject to

$g(x) = 0$

Where $x = (x_1, x_2 \ldots\ldots x_n)$

$g = (g_1, g_2 \ldots\ldots g_m)^T$

Derive the expression for the constrained gradient vector of f.

(b) Solve the following LP by the Jacobian method **(20)**

Maximize $z = 2x_1 + 3x_2$

Subject to

$x_1 + x_2 + x_3 = 5$

$x_1 - x_2 + x_4 = 3$

$x_1, x_2, x_3, x_4 \geq 0$

Contd P/2

NAME 477

3. (a) Derive the Kuhn- Tucker conditions for the problem: **(15)**

Maximize $z = f(x)$

Subject to

$g(x) \geq 0$

(b) Use the method of Lagrangian multipliers to solve the following NLPP. Does the solution maximize or minimize the objective function? **(20)**

Optimize $z = 2x_1^2 + x_2^2 + 3x_3^2 + 10\,x_1 + 8\,x_2 + 6\,x_3 - 100$

Subject to

$x_1 + x_2 + x_3 = 20$

$x_1.\ x_2.\ x_3 \geq 0$

4. (a) Consider the quadratic programming **(15)**

Maximize $z = cx + x^T px$

Subject to

$Ax \leq b$

$x \geq 0$

Show that the necessary conditions can be derived as

$$\begin{bmatrix} -2D & A^T & -I & O \\ A & O & O & I \end{bmatrix} \begin{bmatrix} X \\ \lambda \\ U \\ S \end{bmatrix} = \begin{bmatrix} C^T \\ b \end{bmatrix}$$

$\mu_j x_j = \lambda_i S_i = 0$ for all i and j

$\lambda, U, X, S \geq 0$

Where $\lambda = (\lambda_1.\ \lambda_2 \ldots\ldots \lambda_m)^T$ & $U = (\mu_1.\ \mu_2 \ldots\ldots \mu_n)^T$ and the symbols have their usual significance.

(b) Solve the problem by the steepest ascent method **(20)**

Minimize $z = f(x) = x_1 - x_2 + x_1^2 - x_1 x_2$

Assume $X_0 = (x_1, x_2) = (0, 0)$ and also compare the solution with the analytical one.

SECTION-B

There are **FOUR** questions in this section. Answer any **THREE**

5. Steel plates are available in thickness (in inches) of **(35)**

$$\frac{1}{32}, \frac{1}{16}, \frac{3}{32}, \frac{1}{8}, \frac{5}{32}, \frac{3}{16}, \frac{7}{32}, \frac{1}{4}, \frac{9}{32}, \frac{5}{16}, \frac{4}{32}, \frac{3}{8}, \frac{13}{32}, \frac{7}{16}, \frac{15}{32}, \frac{1}{2}$$

from a manufacturer. If the thickness of the steel plate, to be used in the construction of a pressure vessel, is considered as a discrete design variable, determine the size of the binary string to be used to select a thickness from the available values.

Discuss the equations related with Representation of Design Variables in Genetic Algorithms.

Contd P/3

NAME 477

6. An Industrial Farm uses at least 800 lb of special feed daily. The special feed is a mixture of corn and soybean meal with the following compositions. **(35)**

Feed stuff	lb per lb of feed stuff		
	Protein	Fiber	Cost($/lb)
Corn	0.09	0.02	0.30
Soybean meal	0.60	0.06	0.90

The dieting requirements of the special feed stipulate at least 30% protein and at most 5% fiber. Calculate the daily minimum cost feed mix through graphical procedure.

7. Consider the following ILP and solve for **(35)**

Maximize $z = 5x_1 + 4x_2$

Subject to

$x_1 + x_2 \leq 5$

$10x_1 + 6x_2 \leq 45$

$x_1, x_2 \geq 0$ and integer

8. Consider the problem of maximize the function $f(x) = x^2$.Where X is permitted to vary between 0 and 31. Solve the above problem with details on the steps involved. **(35)**

L-4/T-1/NAME **Date : 15/01/2017**

BANGLADESH UNIVERSITY OF ENGINEERING AND TECHNOLOGY, DHAKA

L-4/T-1 B. Sc. Engineering Examinations 2015-2016

Sub : **NAME 451** (Advanced Ship Structure)

Full Marks: 210 Time : 3 Hours

USE SEPARATE SCRIPTS FOR EACH SECTION

The figures in the margin indicate full marks.

SECTION – A

There are **FOUR** questions in this section. Answer any **THREE**.

The symbols have their usual meanings. Assume reasonable value in case of missing data.

1. (a) "In certain design problems, using the critical stress intensity factor of plane strain as a material property may be too conservative"- Explain. **(5)**

   (b) Discuss the effect of a pulse (on a set of pluses) of higher amplitude on a constant amplitude fatigue load. **(5)**

   (c) Derive Biharmonic equation using Airy's stress function. Derive the component of stresses for mode/ problem in terms of Westergaard stress function. **(25)**

2. (a) Fluctuating load on a critical component of an offshore structure is shown by a histogram in Figure for Q. No. 2(a). During a routine check-up, an edge crack of length 1.5 mm is detected. If the crack length is not allowed to exceed 25mm, determine the remaining life of the component. Use Paris law with material constants as $C = 6.0 \times 10^{-12}$ $(MPa)^{-3.2}$ $m^{-0.6}$ and $\overline{m} = 3.2$. **(20)**

   (b) For a single edge cracked plate under uniform tension, determine the value of stress intensity factor K_I. Given: a =30mm; W =70mm and σ = 140 MPa. **(15)**

3. (a) Determine the natural frequency of vibration for a beam fixed at both ends taking two beam elements. Use lumped mass matrix. The beam has mass density ρ, modulus of elasticity E, cross sectional area A, area moment of inertia I and length 2L. **(15)**

   (b)Find the natural frequencies of longitudinal vibrations of an unconstrained stepped shaft of areas 2A and A and of equal lengths L. Use consistent mass matrix. **(20)**

4. (a) Explain equivalent strut length and Euler validity limit. **(10)**

   (b) An I section to be used as a strut has the following dimensions: **(25)**

   Flanges = 150mm × 10mm

   Web = 280mm × 10mm

   Overall depth = 300mm.

   The column is hinged at one end and fixed at the other end having length of 5m. Calculate safe load by using both Euler's and Rankine's formula. Take $E = 2 \times 10^5$ N/mm^2, $\sigma_c = 320$ N/mm^2, a =1/7500 and Factor of safety = 3.

Contd P/2

NAME 451

SECTION-B

There are **FOUR** questions in this section. Answer any **THREE**

5. (a) Discuss mathematically free vibration with viscous damping with reference to critically damped system. **(20)**

(b) The boom AB of the crane as shown in Fig. for Q. No. 5(b) is a uniform steel bar of length 10m and area of cross-section 2500mm^2. A weight W is suspended while the crane is stationary. The cable CDEBF is made of steel and has a cross sectional area of 100mm^2. Neglecting the effect of the cable CDEF, find the equivalent spring constant of the system in the vertical direction. **(15)**

6. (a) Show that the phenomenon of beat occurs when the frequency of disturbing force is very nearly equal to that of free vibration. **(20)**

(b) A heavy weighing 3000 N is supported on a resilient foundation. The static deflection of the foundation due to the weight of the machine is found to be 7.5cm. The machine vibrates with an amplitude of 1cm when the base of the foundation is subjected to harmonic oscillation at the undamped natural frequency of the system with an amplitude of 0.25cm. **(15)**

Find the damping constant of the foundation, the dynamic force amplitude on the base and the amplitude of the displacement of the machine relative to the base.

7. (a) Find the natural frequencies and mode shape of a spring mass system, as show in Fig. for Q. No. 7(a),which is constrained to move in the vertical direction only. **(15)**

(b) Find the total response of a viscously damped single degree of freedom system subjected to a harmonic base excitation for the following data: m = 10kg, C = 20N-m/s, K = 4000 N/m, Y (t) = 0.05 sin 5tm. X_0 = 0.02m, X_0^0 = 10m/s. **(20)**

8 (a) Describe a method of reducing the vibration of a local part of the structure by using a vibration neutralizer. **(25)**

(b) Write down the methods by means of which undesirable fluctuation can be controlled. **(10)**

NAME- 451

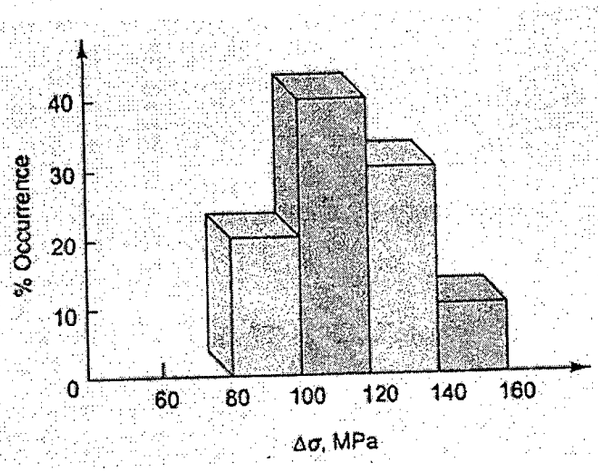

Figure for Q. No. 2(a)

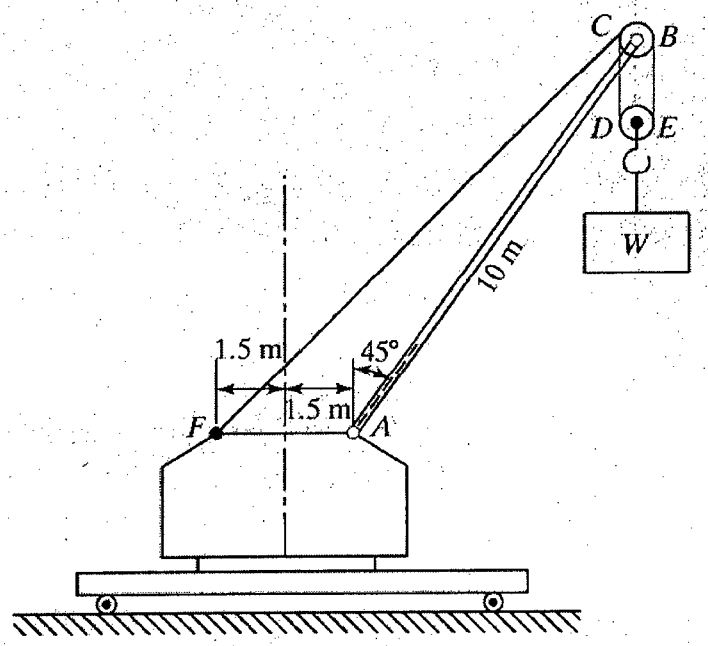

Fig. for Q. 5(b)

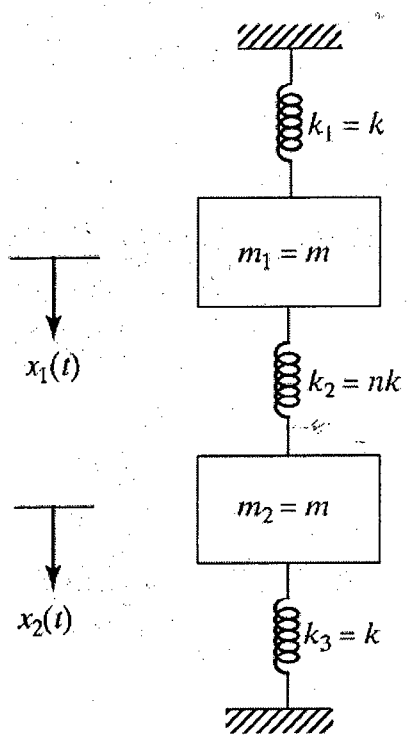

Fig. for Q. 7(a)

L-4/T-1/NAME **Date : 21/01/2017**

BANGLADESH UNIVERSITY OF ENGINEERING AND TECHNOLOGY, DHAKA

L-4/T-1 B. Sc. Engineering Examinations 2015-2016

Sub : **NAME 419** (Motion and Control)

Full Marks: 210 Time : 3 Hours

USE SEPARATE SCRIPTS FOR EACH SECTION

The figures in the margin indicate full marks.

Symbols have their usual meanings

SECTION – A

There are **FOUR** questions in this section. Answer any **THREE**.

1. A 150 m long towing has a width of 5.0 m and a wave maker at one end that generates long- crested regular waves. Assume in this tank a generated regular deep water wave with amplitude τ_a = 0.25 m and wave period T = 2.5 sec. The velocity potential of the wave is given by:

$$\phi_w = \frac{\tau_a g}{w} e^{kz} \sin(kx - wt)$$

With $\rho = 1000\,\text{kg/m}^3$ and $g = 9.81\,\text{m/s}^2$

Determine:

(i) The circular wave frequency, w, the wave number, k, and the wave length, λ.

(ii) The maximum fluid particle velocities u_{max} and W_{max} in x and z directions.

(iii) The path of fluid particle at the surface of the wave. **(3×8=24)**

(iv) The path of fluid particle at 0.500 meter below the still water level.

(v) The maximum pressure at 0.500 meter below the still water level.

(vi) The energy in the waves per unit surface area.

(vii) The phase velocity and the group velocity of these waves.

(viii) The time needed by this generated wave train to reach the other end of the tank.

(ix) Suppose now this regular wave being a shallow water wave in a tank with a water depth of 2.0 meter, described by:

$$\phi_w = \frac{\tau_a g}{w} \frac{\cosh\{k(h+z)\}}{\cosh\{kh\}} \operatorname{Sin}(kx - wt)$$

Determine: **(5)**

(a) The maximum fluid particle displacements X_{max} and Z_{max} in x and z directions at the surface of the fluid as well as at the bottom of the tank.

(b) The maximum fluid particle velocities u_{max} and W_{max} in x and z directions at the surface of the fluid as well as at the bottom of the tank.

Contd P/2

NAME 419

2. (a) Derive an expression for relative vertical bow motion of a ship undergoing heaving and pitching motions in regular head waves without foreword speed. **(15)**

(b) The following values are given for a ship:

Ship Length, L = 137.20 m

Wavelength, L_w = 128.0 m

Head sea, $\mu = 180^0$

Distance of bow from ship CG = 68.60m

Wave height, h_w = 6.10 m

Loaded draught, T = 7.62 m

Freeboard, F = 5.49m

Ship speed, V_s = 20 knot **(20)**

Also given:

Heave amplitude, Z_a = 1.524 m

Pitch amplitude, θ_a = 0.15 radian

Heave phase angle, $\varepsilon_z = -40^0$

Pitch phase angle, $\varepsilon_\theta = 15^0$

The water elevation at the bow is given by

$\tau_b = \tau_a \cos(k_e\xi - w_e t)$. Where k_e is the effective wave number.

Determine the relative vertical motion of the bow and hence find whether the forefoot will emerge when t = 0 and bow immersion will take place when $t = \pi/w_e$.

3. By means of a suitable sketch, explain the co-ordinate system and develop the equations of motion of surge, sway and yaw of a ship with the rudder not working and hence develop the criteria for maintaining straight line stability. **(35)**

4. (a) With a definition diagram, describe the three phases of turn of a ship. Determine the equations of motion at each phase and hence find the expression for steady state value for sway velocity and yaw velocity. **(18)**

(b) For a ship of L = 110 m, B = 18 m, T = 4.1 m, C_B = 0.68, the hydrodynamic and rudder derivatives are as follows: **(17)**

$$Y'_v = -9.65\times10^{-3} \quad Y'_\gamma = 2.14\times10^{-3}$$
$$N'_v = -2.57\times10^{-3} \quad N'_\gamma = -1.44\times10^{-3}$$
$$Y'_\delta = -1.0\times10^{-3} \quad N'_s = 0.5\times10^{-3}$$

Find its turning radius and drift angle for 16 knots at 35^0 degree rudder angle. Symbols have usual meaning.

Contd P/3

NAME 419

SECTION-B

There are **FOUR** questions in this section. Answer any **THREE**

Assume reasonable value in case of missing data

5. (a) Explain what you mean by a 'fully developed sea' and a 'partially developed sea.' **(10)**

(b) Write the expressions for undamped natural periods of heave, roll and pitch motions. Show that if the linear dimension of a ship and those of its geometrically similar model are in the ratio of λ (the scale factor), the natural heaving period is $\sqrt{\lambda}$ times that of the model. **(15)**

(c) Explain the steps for determining the ship motion in as irregular seaway. **(10)**

6. (a) From an irregular wave record, the following statistical information is found:

Wave-height intervals (m)	Average wave height (m)	Number of occurrences
0.25-0.75	0.5	15
0.75-1.25	1.0	30
1.25-1.75	1.5	54
1.75-2.25	2.0	22
2.25-2.75	2.5	15
2.75-3.25	3.0	9
3.25-3.75	3.5	4
3.75-4.25	4.0	1

From the above data, find average height, $\frac{1}{3}$rd and $\frac{1}{10}$th significant wave heights. **(15)**

(b) What are the useful information that can be derived from a wave spectrum? Mention the factors that determine the shape of such spectrum. **(15)**

(c) Write short note on pitching periods. **(5)**

7. (a) A ship has the following particulars:

$$L = 450\,\text{ft} \quad B = 70\,\text{ft}, \quad C_{wp} = 0.80$$

$$\Delta = 12{,}500 \text{ tons} \quad w_e = 1.18 \text{ rad/sec}$$

$$\rho = 1.99 \ \text{lb-sec}^2/\text{ft}^4$$

Wave amplitude $\tau_a = 10\text{ft}$

The added mass for heaving is 80% of the actual mass of the ship. The co-efficient for damping is given in the non-dimensional form as **(25)**

$$\frac{b\sqrt{gL}}{\Delta} = 1.70$$

The amplitude of exciting force for heaving motion is given non-dimensionally as

$$f_0 = \frac{Fo}{\rho g \tau_a LB} = 0.17$$

Find the heaving amplitude of the ship.

Contd P/4

NAME 419

Contd ... Q. No. 7

(b) Explain the effect of shallow water on vessel's motions. **(10)**

8. The equation of rolling motion of a ship is expressed as

$$\frac{d^2\varphi}{dt^2} + 0.0724\frac{d\varphi}{dt} + 0.164\varphi = \alpha'_M \omega_\varphi^2 \sin w_e t$$

If the maximum effective wave-slope α'_M can be considered to be a constant, namely, $\frac{\pi}{20}$ rad, for a certain encountering frequency of 0.20 rad/sec, show that the natural oscillations will gradually disappear with time (Take t=0 to t=90 sec, with interval of 15 sec) while the amplitude of the forced oscillations will remain un-affected. The initial conditions specified are as follows: **(35)**

$$\text{both } \varphi = 0, \text{and } \frac{d\varphi}{dt} = 0 \text{ when } t = 0.$$

L-4/T-1/NAME Date : 25/01/2017

BANGLADESH UNIVERSITY OF ENGINEERING AND TECHNOLOGY, DHAKA

L-4/T-1 B. Sc. Engineering Examinations 2015-2016

Sub : **NAME 415** (Marine Maintenance and Repair)

Full Marks : 210 Time : 3 Hours

The figures in the margin indicate full marks.

USE SEPARATE SCRIPTS FOR EACH SECTION

SECTION – A

There are **FOUR** questions in this section. Answer any **THREE**.

1. (a) Describe the method of built-up welding of shafts with necessary sketch. **(18)**

   (b) Write short note on galvanic coatings. **(7)**

   (c) Briefly explain the repair of cast iron components by means of tie inserts. **(10)**

2. (a) A naval propeller is found with cracks, crumbled edges and fractured blades. Is it possible to repair the propeller? If possible how? **(15)**

   (b) What is fouling? Describe the properties of available anti-fouling paints. **(20)**

3. (a) Describe the dismantling of shafting arrangement for the following cases: **(20)**

   (i) when the ship is afloat

   (ii) when the ship is in drydock

   (b) Briefly explain the available methods of shaft alignment. **(15)**

4. A ship after colliding with an iceberg has been brought to a dockyard for repair works. The types and description of the damages is given below: **(35)**

   (i) Damage of the midship includes shell plate flat vertical of dimension 3 m × 2 m ×10 mm, one keel plate of dimension 1.5 m × 1.5 m × 12 mm with single curvature and three bottom shell plate of dimension 2 m × 2 m × 12 mm thickness with double curvature.

   (ii) Damage of internal bulkhead of dimension 12 m × 12 m × 7 mm thickness positioned at 14 m aft of midship.

   Calculate the net amount of steel required and the man-hours required for the repair.

SECTION-B

There are **FOUR** questions in this section. Answer any **THREE**.

5. (a) Discuss the methods of detecting surface cracks. **(13)**

   (b) What are the causes of defects in casting, forging and rolling which arise in the course of manufacture and subsequent thermal treatment? Illustrate in detail. **(17)**

   (c) Write down the names of the principal types of damages that are found in shell plating, decks, buckheads and framing. **(5)**

Contd P/2

NAME 415

6. (a) Explain with figure how the repair and replacement works of double-bottom framing ship hull is done? **(15)**

   (b) Compare and contract among the three methods that are used for docking of ships. **(15)**

   (c) Discuss the repairing operations that are executed for inspecting the under water hull of ship. **(5)**

7. (a) Mention the steps that are followed to repair cylinders and liners with figures. **(17)**

   (b) Discuss several methods for hull cleaning. **(12)**

   (c) How are the defects in parts with white metal lining detected? Discuss in detail. **(6)**

8. (a) Illustrate the repairing procedures for following auxiliary machineries: **(17)**

   (i) Pumps

   (ii) Condensers

   (iii) Steering gear

   (b) Illustrate with figures methods of finding the thickness reduction of structural elements and the extent of corrosion and erosion damage. **(12)**

   (c) Describe the methods of finding the deformations of hull elements. **(6)**

NAME 415

Table for Q. No. 4.

Table Steel works renewals

Plate thickness (mm)	*Man-hours per tonne*
Up to 6	250
8	245
10	240
12.5	230
16	220
18	210
20	200

Correction for curvature	*Factor increase*
Single	1.2
Double	1.3

*Correction for location – **external***	*Factor increase*
Flat vertical side above 2 metres in height and requiring staging for access	1.1
Bottom shell, accessible areas (i.e. no removals of keel blocks)	1.12
Keel plate	1.4
Garboard plate	1.25
Bilge strake	1.25
Deck plating	1.15

*Correction for location – **internal***	*Factor increase*
Bulkhead	1.2
Longitudinal/transverse above DB areas	1.25
Longitudinal/transverse below DB areas	1.35

L-4/T-1/NAME **Date : 30/01/2017**

BANGLADESH UNIVERSITY OF ENGINEERING AND TECHNOLOGY, DHAKA

L-4/T-1 B. Sc. Engineering Examinations 2015-2016

Sub : **IPE 479** (Engineering Management)

Full Marks: 210 Time : 3 Hours

USE SEPARATE SCRIPTS FOR EACH SECTION

The figures in the margin indicate full marks.

SECTION – A

There are **FOUR** questions in this section. Answer any **THREE**.

1. (a) Differentiate need, want, and demand from marketing management point of view. **(06)**

(b) Explain the significance of identifying a target market and segmenting that market to achieve marketing success. **(12)**

(c) Define time value of money according to financial management concepts. Determine the discounted payback period of a project for the following cash flow information (rate of return = 10%): **(04+13=17)**

Year	Revenue (lacs)
0	-40
1	13
2	17
3	22
4	-8
5	12
6	18
7	-15
8	10

2. (a) A shipyard wants to purchase a computer controlled sheet metal cutting and bending machine to replace a manual cutting machine. There is an offer under consideration for the machine. The company wants to study the financial feasibility of the offer. The associated financial data are as follows: **(20)**

Purchase and installation cost = Tk. 70 lacs; Annual maintenance cost = Tk. 2 lacs, Annual savings = From year 1 to 8: Tk. 12 lacs, From year 9 to 15: Tk. 14 lacs, From year 16 to 20: Tk. 8 lacs; Repair cost at 10^{th}year = Tk. 5 lacs; Salvage value = Tk. 10 lacs; Required rate of return = 15%. Decide whether the company should accept the offer or not.

(b) How does a business market differ from a consumer market in terms of developing marketing strategy? Explain with example. **(15)**

3. (a) Differentiate Maslow's hierarchy of need and ERG theories of motivation. **(07)**

(b) Explain how concepts described in the equity theory of motivation can be applied in developing organizational strategies to motivate employees. **(14)**

(c) Describe the expectancy theory of motivation. **(14)**

4. (a) What are the findings of different behavioral studies of leadership? **(10)**

Contd P/2

IPE 479

Contd... Q. No. 4

(b) Describe different leadership styles and situational variables that impact leadership styles in Fiedler's contingency model of leadership. **(15)**

(c) How an effective performance appraisal system can be designed? **(10)**

SECTION-B

There are **FOUR** questions in this section. Answer any **THREE**

5. (a) Exponential Smoothing is an averaging process is which unequal weights are assigned to the observations. Justify the statement. **(13)**

(b) Considering opinions of all employees, what qualitative forecasting techniques can be used? Which one is better and why? **(12)**

(c) Define time Series. Explain four components of a time series. **(10)**

6. (a) Explain the following terms related to inventory: **(12)**

(i) EOQ, (ii) Effective lead time, (iii) Shortage cost.

(b) An item is consuming at a rate of 30 items per day. The holding cost per unit per day is $0.05, and the setup cost is $100. Suppose that no shortage is allowed and that the purchasing cost per unit is $10 for any quantity not exceeding 500 units and $8 otherwise. **(23)**

(i) Determine the optimal inventory policy, given a 21 day lead time.

(ii) Determine the optimum number of orders per year (based on 365 days per year)

(iii) What is the associated cost per day?

7. (a) What are the advantages and disadvantages of pure project and matrix project? **(19)**

Activity	Immediate Predecessor	Time (Weeks)
A	-	1
B	A	4
C	A	3
D	B	2
E	C, D	5
F	D	2
G	F	2
H	E, G	3

(i) Draw the network.

(ii) What is the critical path?

(iii) How many weeks will it take to complete the project?

(iv) Which activities have slack, and how much?

Contd P/3

IPE 479

8. (a) Explain the benefits of Group technology layout. **(6)**

(b) What are the required inputs to the plant layout decisions? **(5)**

(c) Describe the Factor-Rating system as a plant location technique. **(12)**

(d) Explain the following criteria that influence manufacturing plant and warehouse location planning. **(12)**

(i) Business climate

(ii) Free Trade Zone

(iii) Quality of labor

(iv) Host community.

L-4/T-1/NAME **Date : 05/02/2017**

BANGLADESH UNIVERSITY OF ENGINEERING AND TECHNOLOGY, DHAKA

L-4/T-1 B. Sc. Engineering Examinations 2015-2016

Sub : **NAME 475** (Dredger and Dredging Technology)

Full Marks: 210 Time : 3 Hours

USE SEPARATE SCRIPTS FOR EACH SECTION

The figures in the margin indicate full marks.

SECTION – A

There are **FOUR** questions in this section. Answer any **THREE**.

1. (a) Describe the mechanical and chemical methods for the pre-treatment of rocks prior to dredging operation. **(10)**

   (b) What is a drilling pontoon? With the help of neat sketches explain three most common configurations of drilling pontoon. **(15)**

   (c) Distinguish between the followings: **(10)**

   (i) Hydraulic dredger and mechanical dredger.

   (ii) Capital dredging and maintenance dredging

2. (a) Discuss the potential adverse and beneficial effect of dredging. **(10)**

   (b) Describe the hydraulic transport of dredged material with the help of pressure versus pipeline velocity diagram. **(15)**

   (c) Classify hydraulic dredgers. **(10)**

3. (a) Discuss the dredge ability of a cutter suction dredger for various soil types. **(7)**

   (b) Briefly describe the effect of different site conditions on dredging performance. **(8)**

   (c) Consider that sand particles occupy 27% of the total volume of a dredging pipeline. The rest is occupied by carrying water. The sand-water mixture is discharged from the dredging pipeline at a deposit site. The porosity of the sand in the deposit site is 0.4. Determine: **(20)**

   (i) The density of the sand-water mixture in the pipeline.

   (ii) The weight concentration of solids in the mixture.

   (iii) The in-site density of sand in the deposit site.

4. (a) Why dredging is important for Bangladesh? What are the challenges for dredging in Bangladesh? **(13)**

   (b) Briefly discuss the design of dredging works to determine the width and bend of a navigational channel. **(12)**

   (c) Write short notes on "Dustpan Dredger." **(10)**

Contd P/2

NAME 475

SECTION-B

There are **FOUR** questions in this section. Answer any **THREE**

5. (a) With neat sketches distinguish between fixed and adjustable overflow systems in a trailing suction hopper dredger (TSHD). **(10)**

   (b) Explain 'Deep loading system' for a TSHD. **(5)**

   (c) Define 'draghead'. What are the ways to improve the performance of a draghead? Name various types of dragheads with their applications. **(10)**

   (d) Briefly discuss various methods for discharging hoppers for a TSHD. **(10)**

6. (a) List the advantages and disadvantages of a cutter suction dredger (CSD). **(8)**

   (b) Briefly discuss the following design criteria while designing a cutter suction dredger: **(12)**

   (i) Production capacity
   (ii) Dredging depth and
   (iii) Transport distance

   (c) Describe the function of following components used in a CSD: **(15)**

   (i) Anchor boom
   (ii) Cutter head
   (iii) Dredge pump
   (iv) Spud carriage and
   (v) Ladder winch

7. (a) Explain productive and non-productive working time of a dredger. **(7)**

   (b) Write short note on 'Operational reduction factor' for a dredger. **(8)**

   (c) Define 'production of a dredger'. Briefly discuss the procedure to estimate the production of cutter suction dredger. **(20)**

8. (a) With neat sketches explain under cutting and over cutting for a dredger. **(5)**

   (b) Show the production cycle of a grab hopper dredger. **(5)**

   (c) Discuss the construction features for different types of workboats. **(10)**

   (d) Describe ancillary equipments of a CSD. **(15)**

L-4/T-1/NAME **Date : 05/02/2017**

BANGLADESH UNIVERSITY OF ENGINEERING AND TECHNOLOGY, DHAKA

L-4/T-1 B. Sc. Engineering Examinations 2015-2016

Sub : **NAME 413** (Theory of Hydrofoils)

Full Marks: 210 Time : 3 Hours

USE SEPARATE SCRIPTS FOR EACH SECTION

The figures in the margin indicate full marks.

SECTION – A

There are **FOUR** questions in this section. Answer any **THREE**.

Symbols have their usual meaning.

1. (a) Write short notes on: **(5×4=20)**

   (i) Bernoulli's equation

   (ii) Euler's equation

   (iii) Angle of attack

   (iv) Hydrofoil

   (b) A circle passes through x = a = 1 m and the center of the circle is located at x_c = -0.3 m, y_c = 0.4 m. **(15)**

   The uniform free stream velocity is U = 3 m/s and is included at an angle $\alpha = 10^o$.

   If the rear stagnation point has moved to x = a = 1 m, calculate the circulation strength, Γ around the circle.

2. A hydrofoil section comprises NACA a =0.8 meanline and NACA 66 (modified) thickness form. The relevant velocity data is provided below: **(35)**

	% chord from L.E.	υ/ν (for NACA 66(mod.) thickness form)	$\Delta\upsilon_a/\nu$ (for incidence corresponding to C_L=1.0 and NACA 66(mod.) thickness)	$\Delta\upsilon/\nu$ (NACA a=0.8 meanline and corresponding C_{Li} =1.0)
1	0	0.0	2.987	0.278
2	5	1.071	0.679	0.278
3	10	1.093	0.478	0.278
4	20	1.111	0.323	0.278
5	30	1.121	0.249	0.278
6	40	1.128	0.198	0.278
7	50	1.127	0.161	0.278
8	60	1.099	0.127	0.278
9	70	1.064	0.097	0.278
10	80	1.023	0.071	0.278
11	90	0.974	0.045	0.139
12	95	0.945	0.029	0.069
13	100	0.0	0.0	0.0

Contd P/2

NAME 413

Contd... Q. No. 2

(i) Calculate pressure distribution for 4.5% camber instead of 6.79% camber for which the $\Delta v/v$ values are given.

The required lift coefficient, $C_L = 0.8$.

(ii) Draw the pressure distribution curve and find the value and location of minimum pressure.

3. Using Kutta-Zhukovsky transformation, transform a circle into a cambered hydrofoil profile. **(35)**

Hence prove that the maximum thickness-chord ration of the profile is 1.3 e and situated at the quarter chord point.

4. Derive the expression **(35)**

$C_L = 2\pi (1 + e). \sin(\alpha + \beta)$

For the two dimensional Zhukovsky hydrofoil section. Provide the relevant figures.

SECTION-B

There are **FOUR** questions in this section. Answer any **THREE**

Assume reasonable value for missing data.

5. (a) Describe the thin aerofoil theory and hence prove that **(20)**

$$U\left[\frac{dy}{dx} - \alpha\right] = \frac{1}{2\pi}\int_0^c \frac{\gamma dx}{x - x_1}$$

(b) A hydrofoil has span of 3.3 m and aspect ratio 6.4. For elliptic loading the maximum circulation is 0.85 m^2/s. Calculate for flow velocity of 9 m/s: **(15)**

(i) Lift, (ii) vortex induced drag, (iii) Lift coefficient & (iv) vortex induced drag coefficient.

6. A thin hydrofoil has a camber line defined by y = kx (x-1) (x-7/8) where x and y are the coordinates expressed in terms of unit chord and the origin is at the loading edge. If the maximum camber is 2% of the chord, calculate the lift coefficient at 4° angle of incidence. **(35)**

7. Establish a relationship between spanwise loading and trailing vorticity of a finite hydrofoil. Hence deduce the expression of vortex induced drag. **(35)**

8. Write short notes on:

(a) The horseshoe vortex **(10)**

(b) Helmholtz's Theorems **(7)**

(c) Downwash for the elliptic circulation distribution **(8)**

(d) Velocity and pressure distribution of a Zhukovsky hydrofoil. **(10)**
