L-4/T-1/URP **Date : 15/01/2017**

BANGLADESH UNIVERSITY OF ENGINEERING AND TECHNOLOGY, DHAKA

L-4/T-1 BURP Examinations 2015-2016

Sub : **PLAN 403** (Legal Basis of Planning)

Full Marks: 210 Time : 3 Hours

USE SEPARATE SCRIPTS FOR EACH SECTION

The figures in the margin indicate full marks.

SECTION – A

There are **FOUR** questions in this section. Answer any **THREE**.

1. (a) What terms and conditions have to be fulfilled for sanctioning permission for cutting of hills according to Building Construction Act, 1952 of Bangladesh. **(10)**

(b) Write down the following definitions according to Building Construction Rules, 2008 of Bangladesh. **(5×3=15)**

(i) Unsafe Building,

(ii) Height of the Building,

(iii) Master Plan,

(iv) Ground Coverage,

(v) Floor Area Ratio.

(c) Calculate 'a' and 'b' according to the BNBC's specification of open space requirement between adjacent buildings from the following figure. **(10)**

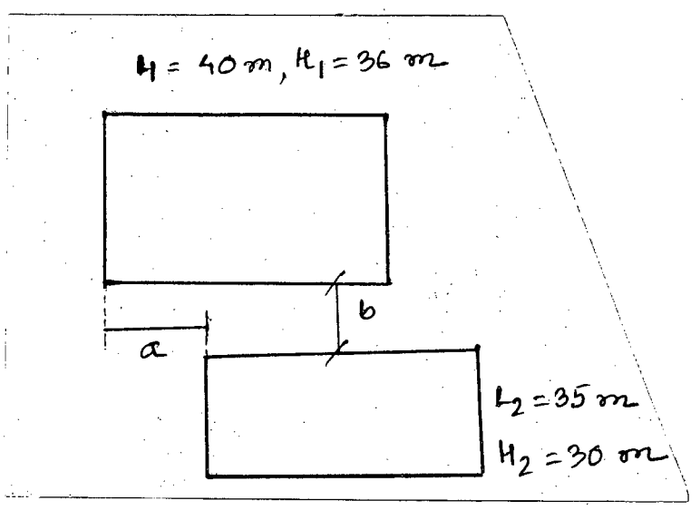

2. (a) What are the different types of residential building according to the Bangladesh National Building Code (BNBC) and how do they differ from each other? **(10)**

(b) Describe the responsibilities vested on the Pourashavas to enhance public health and education according to Local Government Pourashava Act, 2009. **(15)**

(c) According to the "Open space and Wetland Conservation Act, 2000" of Bangladesh can anyone change the use of land for playground, open space or wetland? If yes, what is the procedure to be followed? **(10)**

Contd P/2

PLAN 403

3. (a) Describe the procedure of land acquisition in Bangladesh according to the "Acquisition and Requisition of Immovable Property Ordinance, 1982". **(20)**
(b) According to the Private Residential Land Development Rules, 2004 of Bangladesh how would the owners whose lands were acquired be rehabilitated or compensated? **(15)**

4. (a) What are the conditions for approval of private residential project according to the Private Residential Land Development Rules, 2004 of Bangladesh? **(16)**
(b) According to the BNBC, 2006, what are the conditions to be fulfilled for using roads and footpath spaces temporarily during construction? **(14)**
(c) Define the following (Any Two) **(2½×2=5)**
   (i) Travel Distance (According to the BNBC, 2006)
   (ii) Fire Resistance Rating (According to BNBC, 2006)
   (iii) Wetland (According to Open Space and Wetland Conservation Act, 2000 of Bangladesh)

SECTION – B

There are **FOUR** questions in this section. Answer any **THREE**.

5. (a) What is the importance of law in general, in a human society? **(10)**
(b) Differentiate between liberty rights, claim rights, basic needs and wider needs with appropriate examples. **(15)**
(c) What is meant by right based planning? Provide an example. **(10)**

6. (a) "Apart from distributive justice, legal basis of planning should consider substantive equality (vertical equality) and procedural justice". Do you agree? Justify your answer. **(15)**
(b) "Many of our current laws are prescriptive, not preventive or incentive based." Elaborate the statement. **(10)**
(c) What is the importance of technical or subject specific knowledge or research in settling the public interest litigation? **(10)**

7. (a) What are the legal difficulties in allowing Uber Taxi Service in Dhaka? The situation is also an example of the need for socio-historical approach of making laws. Explain the concepts of socio-historical approach. **(10+10)**
(b) Name and describe two other approaches of making laws. **(15)**

8. (a) There are several court cases challenging changing layouts of plots, walkways and lakes. Discuss them in the context of logic put forward by the two parties, petitioner and defendants and the points considered by the Honorable Judges. **(20)**
(b) A land ownership document has mentioned the names of several surveys, such as— Cadastral Survey (CS), Revisional Settlement (RS), Bangladesh Survey (BS), City Survey. Describe these surveys. **(15)**

L-4/T-1/URP **Date : 21/01/2017**

BANGLADESH UNIVERSITY OF ENGINEERING AND TECHNOLOGY, DHAKA

L-4/T-1 B. Sc. Engineering Examinations 2015-2016

Sub : **PLAN 401** (Project Evaluation and Management)

Full Marks: 210 Time : 3 Hours

USE SEPARATE SCRIPTS FOR EACH SECTION

The figures in the margin indicate full marks.

SECTION – A

There are **FOUR** questions in this section. Answer any **THREE**.

1. (a) Describe different measures to estimate budget of a project. **(8)**

   (b) "Project monitoring and evaluation system is developed simultaneously with project cycle to serve different purposes"-Justify the statement. **(12)**

   (c) "Although monitoring, evaluation and audit are often used synonymously, they are significantly different"-explain. **(15)**

2. Suppose, a project has been considered to reduce the frequency of bus accidents from 2010 to 1016. As the project planner–

   (a) Prepare a problem tree. **(5)**

   (b) Prepare a objective tree. **(5)**

   (c) Construct a log-frame matrix which can be used for logical framework analysis of the project. For construction of the matrix consider an activity to solve a single cause and consequently to reduce its effects. **(10)**

   (d) Analyze the logical framework of the project using the constructed log-frame matrix and justify whether the project is successful or not. **(15)**

3. (a) Assume, there are only two producers in the economy X and Y, where X produces only food and Y produces only clothing. There are a fixed amount of only two resources to produces these items, they are- capital and labour. Based on this scenario, derive a production possibility frontier (PPF) from pareto optimal allocation of these resources. **(15)**

   (b) Describe development of different types of projects from policy level to project level (Policy-Plan-Program-Project) along with different types of procurement needs for the projects. Use specific examples in the context of Bangladesh. **(20)**

4. (a) State different types of project selection models. What are the criteria that should be considered while choosing project selection model? **(7+4=11)**

   (b) Suppose a project has been considered for development of Buriganga riverfront. To prepare the plan for this development, five consultancy firms have submitted their technical and financial proposals. After evaluation, points given to their proposals by the evaluation committee are provided in table 1 and table 2. Which of the firms would you select as a procuring entity on the basis of- **(10+7+7=24)**

Contd P/2

PLAN 401

Contd ... Q. No. 4(b)

(i) Quality and Cost Based Selection (QCBS) (consider relative weights of cost and quality 65% and 35% respectively.)

(ii) Fixed Budget Selection (FBS) (consider the budget for the project as 3.2 billion BDT.)

(iii) Least Cost Selection (LCS)

Explain your answers with proper justification.

Table 1: Evaluation of technical proposals

Consultant	Specific experience	Adequacy of methodology and work plan	Key staff Qualification	transfer of knowledge
A	9	32	27	3
B	10	15	35	2
C	6	31	37	8
D	8	40	40	7
E	6	39	32	10

Table 2: Evaluation of financial proposals

Consultant	Budget (in billion BDT)	Point
A	2.9	97
B	3.1	88
C	2.7	100
D	3.4	68
E	3.0	93

SECTION-B

There are **FOUR** questions in this section. Answer any **THREE**

5. (a) Define ordinary annuity and annuity due. **(5)**

(b) Assume that you took a loan of TK 10,000 from a bank and agreed to pay it in 5 years with a stated interest rate of 9.7% compounded quarterly. Prepare your loan amortization schedule considering that the installments are paid at the end of each year. **(15)**

(c) Explain how shadow prices are measured for specific resources considering their impact on the economy. **(15)**

Contd P/3

PLAN 401

6. (a) Compare the Project Evaluation and Review Technique (PERT) with Critical Path Method (CPM). **(7)**

(b) Differentiate between sensitivity analysis and scenario analysis. **(7)**

(c) State the similarities and dissimilarities between the two approaches of social cost benefit analysis. **(9)**

(d) The 'X' organization is conducting a break-even analysis of a new project, based on the previous data of similar projects. Estimate the accounting and financial break-even point of the income of the proposed project using the following data: **(12)**

(i) Initial Investment: TK 40 million
(ii) Variable cost: TK 19 million
(iii) Income: TK 26 million
(iv) Fixed cost: TK 2 million
(v) Depreciation: TK 2.5 million
(vi) Tax: 20%
(vii) Project life: 10 years
(viii) Interest rate: 12%

7. Consider the following two mutually exclusive projects- (See table 3)

Table 3

Year	Cash Flow (A) in TK	Cash Flow (B) in TK
0	-170,000	-18,000
1	10,000	10,000
2	25,000	6,000
3	25,000	10,000
4	380,000	8,000

Whichever project you choose, if any, you require a cost of capital of 15% on your investment.

(a) If you apply the discounted payback criteria, which investment will you choose and why? **(10)**

(b) If you apply the Net Present Value (NPV) criteria, which investment will you choose and why? **(5)**

(c) If you apply the Internal Rate Return (IRR) criteria, which investment will you choose and why? **(10)**

(d) Based on your answers in (a) through (c), which project will you finally choose and why? **(10)**

8. Using the information in the following table 4 and assuming that the project team will work a standard working week (5 working days in a week) and that all tasks will start as soon as possible:

(a) Determine the critical path of the project. Also calculate the planned duration of the project in weeks. **(15)**

Contd P/4

PLAN 401

Contd ... Q. No. 8

(b) Identify the non-critical tasks and floats on each. **(6)**

(c) The standard deviation from the mean duration of the project is 12 days. Find the probability of completion by 65 days. (Use table 5). **(7)**

(d) State the time by which the management will be 95% sure that the project completion will occur. (Use table 5). **(7)**

Table 4

Task	Description	Duration (Working Days)	Predecessor/s
A	Base Map Preparation	5	----
B	Reconnaissance Survey	15	A
C	Land Use Survey	25	B
D	Socio-Economic Survey	15	B
E	Focus Group Discussion	30	B
F	Data compilation	10	C,D
G	Data Analysis and Interpretation	10	E,F
H	Plan Preparation	5	G
I	Preparation of Project Report	5	H

PLAN 401

Table 5

Cumulative Areas under the Standard Normal Curve (*continued*)

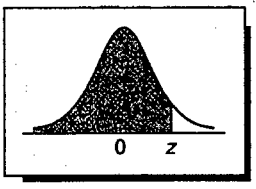

z	0.00	0.01	0.02	0.03	0.04	0.05	0.06	0.07	0.08	0.09
0.0	0.5000	0.5040	0.5080	0.5120	0.5160	0.5199	0.5239	0.5279	0.5319	0.5359
0.1	0.5398	0.5438	0.5478	0.5517	0.5557	0.5596	0.5636	0.5675	0.5714	0.5753
0.2	0.5793	0.5832	0.5871	0.5910	0.5948	0.5987	0.6026	0.6064	0.6103	0.6141
0.3	0.6179	0.6217	0.6255	0.6293	0.6331	0.6368	0.6406	0.6443	0.6480	0.6517
0.4	0.6554	0.6591	0.6628	0.6664	0.6700	0.6736	0.6772	0.6808	0.6844	0.6879
0.5	0.6915	0.6950	0.6985	0.7019	0.7054	0.7088	0.7123	0.7157	0.7190	0.7224
0.6	0.7257	0.7291	0.7324	0.7357	0.7389	0.7422	0.7454	0.7486	0.7518	0.7549
0.7	0.7580	0.7611	0.7642	0.7673	0.7704	0.7734	0.7764	0.7794	0.7823	0.7852
0.8	0.7881	0.7910	0.7939	0.7967	0.7995	0.8023	0.8051	0.8078	0.8106	0.8133
0.9	0.8159	0.8186	0.8212	0.8238	0.8264	0.8289	0.8315	0.8340	0.8365	0.8389
1.0	0.8413	0.8438	0.8461	0.8485	0.8508	0.8531	0.8554	0.8577	0.8599	0.8621
1.1	0.8643	0.8665	0.8686	0.8708	0.8729	0.8749	0.8770	0.8790	0.8810	0.8830
1.2	0.8849	0.8869	0.8888	0.8907	0.8925	0.8944	0.8962	0.8980	0.8997	0.9015
1.3	0.9032	0.9049	0.9066	0.9082	0.9099	0.9115	0.9131	0.9147	0.9162	0.9177
1.4	0.9192	0.9207	0.9222	0.9236	0.9251	0.9265	0.9279	0.9292	0.9306	0.9319
1.5	0.9332	0.9345	0.9357	0.9370	0.9382	0.9394	0.9406	0.9418	0.9429	0.9441
1.6	0.9452	0.9463	0.9474	0.9484	0.9495	0.9505	0.9515	0.9525	0.9535	0.9545
1.7	0.9554	0.9564	0.9573	0.9582	0.9591	0.9599	0.9608	0.9616	0.9625	0.9633
1.8	0.9641	0.9649	0.9656	0.9664	0.9671	0.9678	0.9686	0.9693	0.9699	0.9706
1.9	0.9713	0.9719	0.9726	0.9732	0.9738	0.9744	0.9750	0.9756	0.9761	0.9767
2.0	0.9772	0.9778	0.9783	0.9788	0.9793	0.9798	0.9803	0.9808	0.9812	0.9817
2.1	0.9821	0.9826	0.9830	0.9834	0.9838	0.9842	0.9846	0.9850	0.9854	0.9857
2.2	0.9861	0.9864	0.9868	0.9871	0.9875	0.9878	0.9881	0.9884	0.9887	0.9890
2.3	0.9893	0.9896	0.9898	0.9901	0.9904	0.9906	0.9909	0.9911	0.9913	0.9916
2.4	0.9918	0.9920	0.9922	0.9925	0.9927	0.9929	0.9931	0.9932	0.9934	0.9936
2.5	0.9938	0.9940	0.9941	0.9943	0.9945	0.9946	0.9948	0.9949	0.9951	0.9952
2.6	0.9953	0.9955	0.9956	0.9957	0.9959	0.9960	0.9961	0.9962	0.9963	0.9964
2.7	0.9965	0.9966	0.9967	0.9968	0.9969	0.9970	0.9971	0.9972	0.9973	0.9974
2.8	0.9974	0.9975	0.9976	0.9977	0.9977	0.9978	0.9979	0.9979	0.9980	0.9981
2.9	0.9981	0.9982	0.9982	0.9983	0.9984	0.9984	0.9985	0.9985	0.9986	0.9986
3.0	0.99865	0.99869	0.99874	0.99878	0.99882	0.99886	0.99889	0.99893	0.99897	0.99900
3.1	0.99903	0.99906	0.99910	0.99913	0.99916	0.99918	0.99921	0.99924	0.99926	0.99929
3.2	0.99931	0.99934	0.99936	0.99938	0.99940	0.99942	0.99944	0.99946	0.99948	0.99950
3.3	0.99952	0.99953	0.99955	0.99957	0.99958	0.99960	0.99961	0.99962	0.99964	0.99965
3.4	0.99966	0.99968	0.99969	0.99970	0.99971	0.99972	0.99973	0.99974	0.99975	0.99976
3.5	0.99977	0.99978	0.99978	0.99979	0.99980	0.99981	0.99981	0.99982	0.99983	0.99983
3.6	0.99984	0.99985	0.99985	0.99986	0.99986	0.99987	0.99987	0.99988	0.99988	0.99989
3.7	0.99989	0.99990	0.99990	0.99990	0.99991	0.99991	0.99992	0.99992	0.99992	0.99992
3.8	0.99993	0.99993	0.99993	0.99994	0.99994	0.99994	0.99994	0.99995	0.99995	0.99995
3.9	0.99995	0.99995	0.99996	0.99996	0.99996	0.99996	0.99996	0.99996	0.99997	0.99997

L-4/T-1/URP Date : 25/01/2017

BANGLADESH UNIVERSITY OF ENGINEERING AND TECHNOLOGY, DHAKA

L-4/T-1 B. Sc. Engineering Examinations 2015-2016

Sub : **CE 471** (Basic Environmental Engineering)

Full Marks: 210 Time : 3 Hours

Symbols have their usual meanings.

Assume reasonable value for any missing data

SECTION – A

There are **FOUR** questions in this section. Answer any **THREE**.

1. (a) What is the purpose of Water Supply System? With a neat sketch, show the elements of a Water Supply System based on groundwater. **(5+5+7)**

State the various uses of water.

Why is water consumption rate much less in rural areas in Bangladesh compared to a city? Explain.

(b) State the limitations of following Population Projection methods:

(i) Arithmetic Progression method

(ii) Geometric Progression method

(iii) Annual rate of Increase method

(iv) Incremental Increase method **(8+10)**

The population data of a small town is given below. Determine the probable population for the year 2050 by Least Square Parabola method.

Year	1990	2000	2010	2020
Population	20,000	25,000	29,200	33,500

2. (a) What is the role of selection of water source in planning of a water supply system?

Write short notes on:

(i) Tube well, (ii) Intake, (iii) Unconfined Aquifer **(11+9)**

What should be the desirable qualities of drinking water?

A water source is selected and proposed for supplying drinking water to a community by piping system. But the water is colored and contains high amount of iron. What treatment methods should be needed to make the water suitable for drinking? Describe with a flow diagram.

(b) Describe the mechanisms of Filtration. What are the operational difficulties associated with Rapid Sand Filtration (RSF)? Describe. **(7+8)**

Make a comparison between Rapid Sand Filter (RSF) and Slow Sand Filter (SSF) on the following aspects:

(i) Filtration efficiency

(ii) Filter materials

(iii) Cleaning and

(iv) Operation and maintenance

Contd P/2

CE 471

3. (a) Describe the factors that should be considered in planning and designing of a Water Distribution System.

You are in charge of planning of a Water Distribution System for a Zilla town. What Distribution methods would you prefer and why? **(5+5+10)**

One million gallons of water per day (1 mgd) passes through a sedimentation tank which is 50 ft long, 20 ft wide and 10 ft deep. Determine:

(i) Detention time for the tank

(ii) Average velocity of flow through the tank

(iii) Surface overflow rate

(b) Why do you need to treat waste water? **(3+6+6)**

With a flow diagram, show the elements of an Activated Sludge Process.

What is the difference between Activated Sludge Process and Trickling Filter Process?

Describe the mechanism of Facultative pond in treating the wastewater.

4. (a) You need to provide sanitation facility to an Upazilla town where the socio-economic and hydrogeological variations are considering high. What factors should you consider to make that sanitation project sustainable in that area? Describe. **(10+10)**

Design a septic tank to serve a household of 10 persons, who produce 90 lpcd of waste-water. The tank is to be desludged in every four (4) years. (Assume an average temperature of 25^0C and assume reasonable value of any other missing data.)

(b) Describe the Sewerage System of Dhaka city in detail including it's future plan. **(15)**

SECTION-B

There are **FOUR** questions in this section. Answer any **THREE**

5. (a) What are the objectives of Solid Waste Management (SWM)? **(5+8+6)**

How can you adopt- Avoid, Reduce, Reuse and Recycle practices in your daily life? Describe with at least two examples in each case.

The chart shown in Figure-1 compares the SWM system in Dhaka and Melbourne. Point out two major limitations in SWM in Dhaka and briefly mention their likely consequences on environmental pollution.

(b) What are the reasons behind the low generation rate of Municipal Solid Waste (MSW) in developing countries compared to developed countries? Explain. **(6+10)**

Describe the different storage and collection systems of solid waste with their advantages and disadvantages.

Contd P/3

CE 471

6. (a) Define the following terms in Solid Waste (SW) collection system- **(8+11)**

(i) Haul, (ii) Pickup, (iii) At-site, (iv) Off-route. What is your opinion regarding SWM system of Dhaka city? What is your recommendation to improve the situation? Describe.

(b) Describe the factors which need to be considered is selecting the site of a Sanitary Landfill. **(12+4)**

State the specific siting requirement that should be met in planning of a Sanitary Landfill.

7. (a) Differentiate between Primary Air Pollutants and Secondary Air Pollutants with examples.

Define the phenomenon 'Global Warming'. How can you relate this with Air Pollution? Explain. **(5+7+8)**

What vulnerabilities that Bangladesh is expected to face due to Global Warming? Describe.

(b) What measures are considered in global and national level to recover the ozone layer? Describe. **(6+9)**

Describe the effects of acid rain on the followings:

(i) Aquatic life, (ii) Terrestrial life, (iii) Buildings.

8. (a) Distinguish between indoor air pollution and outdoor air pollution.

How can you minimize the effects of noise pollution generated by-

(i) Traffic, (ii) Low-flying aircraft, (iii) Industrial equipment? **(4+9+3+7)**

What sound power level results from combining the following three levels of sound-

(i) 68 db from wasting machine,

(ii) 79 db from a concrete mixer and

(iii) 75 db from an aircraft?

(b) What do you mean by 'Leachate'? How can you manage leachate and landfill gas in a sanitary landfill? Describe. **(4+8)**

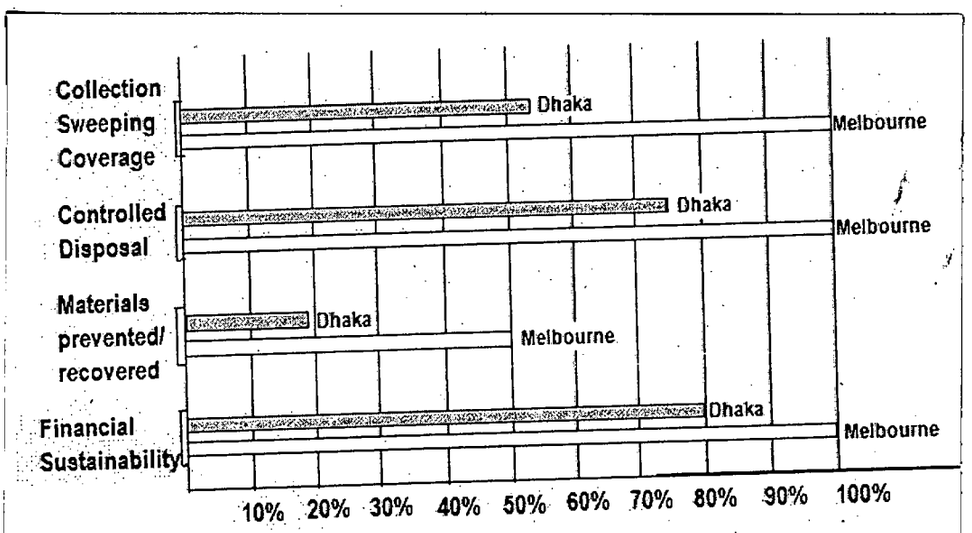

Figure - 1

(Question No. - 5a)

L-4/T-1/URP **Date : 30/01/2017**

BANGLADESH UNIVERSITY OF ENGINEERING AND TECHNOLOGY, DHAKA

L-4/T-1 B.URP Engineering Examinations 2015-2016

Sub : **PLAN 451** (Environmental Planning and Management)

Full Marks: 210 Time : 3 Hours

USE SEPARATE SCRIPTS FOR EACH SECTION

The figures in the margin indicate full marks.

SECTION – A

There are **FOUR** questions in this section. Answer any **THREE**.

1. (a) Using the following formula and table, calculate and interpret the AQI value for a certain area, where reading for concentration of different pollutants in the ambient air were- **(15+5=20)**

   (i) O_3(1 hour) = 0.20 ppm

   (ii) CO = 30 ppm

   (iii) SO_2 = 0.140 ppm

Table 1: Breakpoints for the AQI

This Breakpoint...						...equal this AQI	
O_3 (ppm) 8-hour	O_3 (ppm) 1-hour1	PM_{10} (μg/m³)	$PM_{2.5}$ (μg/m³)	CO (ppm)	SO_2 (ppm)	NO_2 (ppm)	AQI
0.000 - 0.064	-	0 - 54	0.0 - 15.4	0.0 - 4.4	0.000 - 0.034	(2)	0 - 50
0.065 - 0.084	-	55 - 154	15.5 -40.4	4.5 - 9.4	0.035 - 0.144	(2)	51 - 100
0.085 - 0.104	0.125 - 0.164	155 - 254	40.5 - 65.4	9.5 - 12.4	0.145 - 0.224	(2)	101 - 150
0.105 - 0.124	0.165 - 0.204	255 - 354	65.5 - 150.4	12.5 - 15.4	0.225 - 0.304	(2)	151 - 200
0.125 - 0.374 (0.155 - 0.404)[4]	0.205 - 0.404	355 - 424	150.5 - 250.4	15.5 - 30.4	0.305 - 0.604	0.65 - 1.24	201 - 300
(3)	0.405 - 0.504	425 - 504	250.5 - 350.4	30.5 - 40.4	0.605 - 0.804	1.25 - 1.64	301 - 400
(3)	0.505 - 0.604	505 - 604	350.5 - 500.4	40.5 - 50.4	0.805 - 1.004	1.65 - 2.04	401 - 500

(b) Do you think that the term "Tragedy of common" is related with the concept of "Prisoners' Dilemma"? Explain your reasoning with necessary example. **(15)**

2. (a) Define the term "Environmental Inventory". Describe the purpose of IEE with relation to its position in the project cycle. **(4+4+2=10)**

Contd P/2

PLAN 451

Contd... Q. No. 2

(b) Name the major steps of an EIA process. **(10)**

(c) Discuss the environmental stresses existing in Bangladesh, with necessary examples. **(15)**

3. (a) Describe the sequential way of considering mitigation measures in an EIA process. **(10)**

(b) Describe the categories of solid waste in brief. Also describe the ways you think hazardous wastes can be managed. **(15+5=20)**

(c) Explain the importance of carrying capacity and Ecological footprint in Environmental Planning. **(5)**

4. (a) Briefly describe any three methods through which scope of EIA for any project can be determined. **(3×5=15)**

(b) Describe the major differences in permission process of Green and Red Category Industries according to Environmental Conservation Rules 1997 of Bangladesh. **(8)**

(c) Describe the importance as well as challenges while implementing 3R waste management strategies in Bangladesh. **(12)**

SECTION-B

There are **FOUR** questions in this section. Answer any **THREE**

Use examples if necessary; Abbreviations have their usual meaning

5. (a) "Though environmental problems vary from city to city, region to region, the cities of developing countries face three types of problem"- explain these problems. **(15)**

(b) Define 'eco-planning'. What are the environmental quality objectives of eco-planning? **(4+16)**

6. You are working in the Ministry of Housing and Public Works. You have been assigned to brief the Secretary of the Ministry on sustainable development.

(a) One of the first problem you face was to define 'sustainable development'. The Secretary has background in economics with interest in ecology. Considering these you decided to explain sustainable development from Economist's and Ecologist's perspective. Describe how Economist's and Ecologist's defined sustainable development. **(8)**

(b) The Secretary wants to revise the existing national strategy for sustainable development. So he needs to know the present priority areas of sustainable development in Bangladesh. Explain the priority areas. **(15)**

Contd P/3

PLAN 451

Contd... Q. No. 6

(c) The Secretary decided to have a Strategic Environmental Assessment (SEA) for the "Strategy of Sustainable Development". Describe the methodological principles that needed to be followed for conducting the SEA. **(12)**

7. You joined RAJUK as an Assistant Town Planner.

(a) You have received a file seeking planning permission for a hazardous industry. What are the factors you would consider before issuing planning permission for the industry? **(12)**

(b) The Chief Town Planner assigned you to develop a guideline for Fecal Sludge Management (FSM) in Dhaka. What are the challenges you could identify for FSM in Dhaka? **(12)**

(c) RAJUK has decided to introduce "Green Space Factor", in its planning permission process. Before introducing it, RAJUK wants to test how it could integrate environment in planning process. You are in the team who could test it. What are the tools you have to test whether "Green Space Factor", could integrate environment into urban planning in Bangladesh context. **(11)**

8. (a) You are working as an assistant Urban planner at UDD.

You have been asked by Director to prepare a guideline for urban forestry. Before preparing the guideline the Director of UDD asked you to brief him on general principles you might follow. In this regard you decided to follow the principles developed by American Planning Association (APA). Describe the principles. **(10)**

(b) Describe the differences between Environmental Impact Assessment (EIA) and Strategic Environmental Assessment (SEA). **(10)**

(c) Write short notes (Any three)- **(5×3=15)**

(i) Green Agenda.
(ii) Strategy for Watershed Management in DMDP.
(iii) Methods for Ecological Planning.
(iv) Environmentalism before 1940.

L-4/T-1/IPE **Date : 15/01/2017**

BANGLADESH UNIVERSITY OF ENGINEERING AND TECHNOLOGY, DHAKA

L-4/T-1 B. Sc. Engineering Examinations 2015-2016

Sub : **IPE 317** (Product Design II)

Full Marks: 210 Time : 3 Hours

USE SEPARATE SCRIPTS FOR EACH SECTION

The figures in the margin indicate full marks.

SECTION – A

There are **FOUR** questions in this section. Answer any **THREE**.

The text book titled "Shigley's Mechanical Engineering Design" is supplied.

Assume reasonable values for missing data.

1. (a) The shaft shown in the figure is made of AISI 1030 hot-rolled steel. The gears seat against the shoulders, and have hubs with setscrews to lock them in place. The effective centers of the gears for force transmission are shown. The keyseats are cut with standard endmills. The bearings are press-fit against the shoulders. Determine the minimum fatigue factor of safety using the DE-Gerber fatigue criterion. (All dimensions are in inches) **(25)**

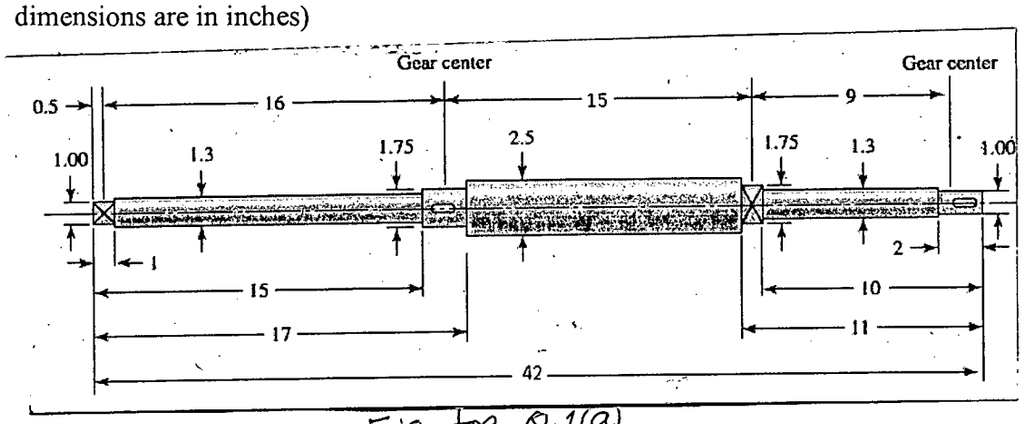

Fig. for Q.1(a)

(b) A 02-series single-row angular contact ball bearing with 85-mm bore is loaded with a 4.5-kN axial load and a 7.5-kN radial load. The outer ring rotates at 500 rev/min. Determine whether this bearing should be expected to carry these loads with a 97 percent reliability for 11 kh. **(10)**

2. (a) A commercial enclosed gear drive consists of a 20^0 spur pinion having 20 teeth driving a 50-tooth gear. The pinion speed is 350 rev/min, the face width 2 in, and the diametral pitch 6 teeth/in. The gears are grade 1 steel, through-hardened at 250 Brinell, made to No. 7 quality standards, crowned, and are to be accurately and rigidly straddle-mounted with bearings immediately adjacent. The power source provides light shock but the power from the shaft is uniform. Back up ratio is 1.1. Assume a pinion life of 10^8 cycles and a reliability of 0.90. Determine the AGMA bending and contact stresses and the corresponding factors of safety only for the pinion if 5 hp is to be transmitted. **(28)**

Contd P/2

IPE 317

Contd... Q. No. 2

(b) Consider a pedestal bearing with a keyway sump, whose journal rotates at 1000 rev/min in air stirred at 24.5 m/s at 25^0C with $a = 1$. The lubricant is SAE grade 20 oil. The gravity radial load is 500 N and the l/d ratio is 0.5. The bearing has a journal diameter of 40.000±0.001 mm, a bushing bore of 40.050±0.005 in. The steady-state temperature of the film is 92^0C. For a minimum clearance assembly, estimate the lateral area of the bearing. **(7)**

3. (a) A right-hand double-start hardened-steel worm has a catalog rating of 2.5 kW at 700 rev/min when meshed with a 48-tooth cast-iron gear. The axial pitch of the worm is 22 mm, the normal pressure angle is 14.5^0, the pitch diameter of the worm is 90 mm, and the face widths of the worm and gear are, respectively, 90 mm and 50 mm. Bearings are centered at locations A and B on the worm shaft. Determine which should be the thrust bearing (so that the axial load in the shaft is in compression), and find the magnitudes and directions of the forces exerted by both bearings. **(28)**

(All dimensions are in mm)

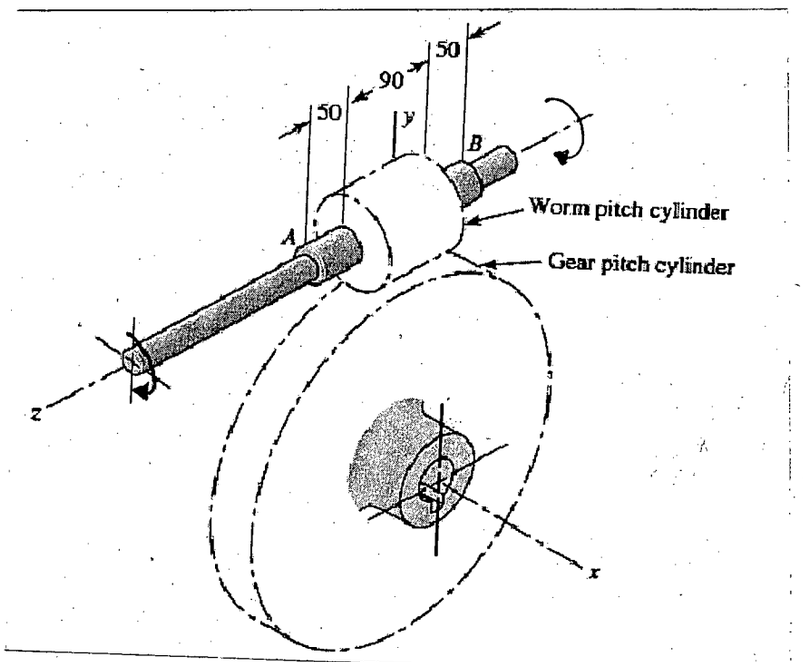

Fig. for Q.3(a)

(b) An Oiles SP 500 alloy brass bushing is 22 mm long with a 20 mm bore and operates in a dusty environment at 25^0C. The radial load is 2500 N. The shaft rotates at 225 rev/min. If the bearing operates for 1200 hr, find the amount of radial wear in the bearing. **(7)**

Contd P/3

IPE 317

4. Design a precision straight-bevel gear mesh for shaft centerlines that intersect perpendicularly, to deliver 8.0 hp at 950 rev/min with a gear ratio of 4:1, temperature of 350^0F, normal pressure angle of 20^0, using a design factor of 3. The load is medium shock-uniform. Use a pinion of 20 teeth. Only the pinion is straddle-mounted. The material is to be AGMA grade 1 and the teeth are to be crowned. The reliability goal is 0.999 with a pinion life of 10^9 revolutions. **(35)**

SECTION – B

There are **FOUR** questions in this section. Answer any **THREE**.

5. (a) The figure shows a 400-mm-diameter brake drum with four internally expanding shoes. Each of the hinge pins A and B supports a pair of shoes. The actuating mechanism is to be arranged to produce the same force F on each shoe. The face width of the shoes is 75 mm. The material used permits a coefficient of friction of 0.24 and a maximum pressure of 1000 kPa. **(20)**

   (i) Determine the maximum actuating force.

   (ii) Estimate the brake capacity.

   (iii) Noting that rotation may be in either direction. Estimate the hinge-pin reactions.

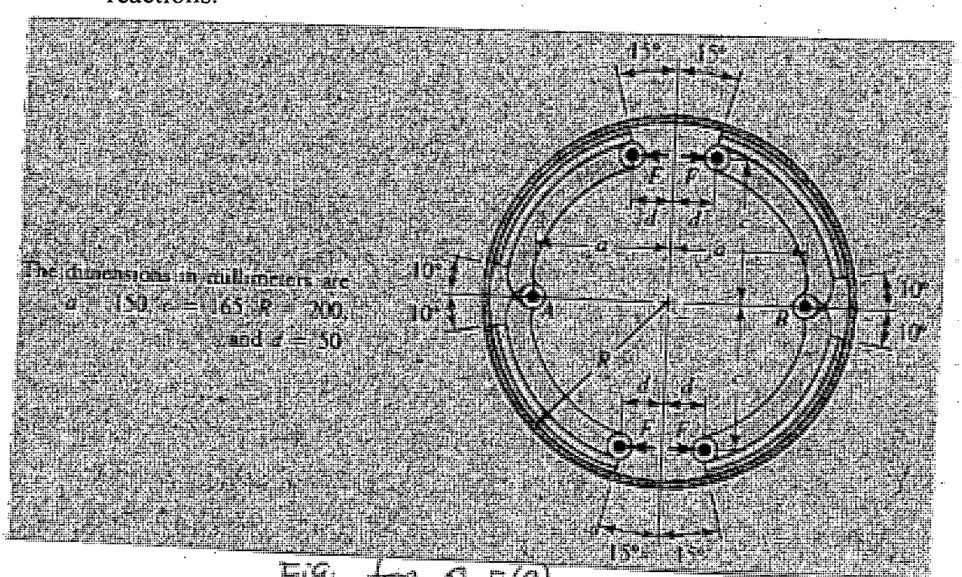

Fig for Q·5(a)

(b) Find the reliability of the following complex system. The Reliability of each individual component is 0.9. **(15)**

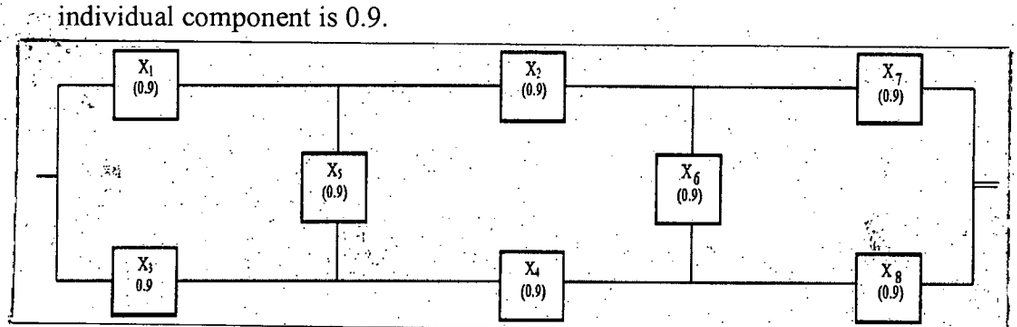

Fig. for Q·5(b)

IPE 317

6. (a) Perform design improvement for the following designs according to DFM and DFA guidelines. **(15)**

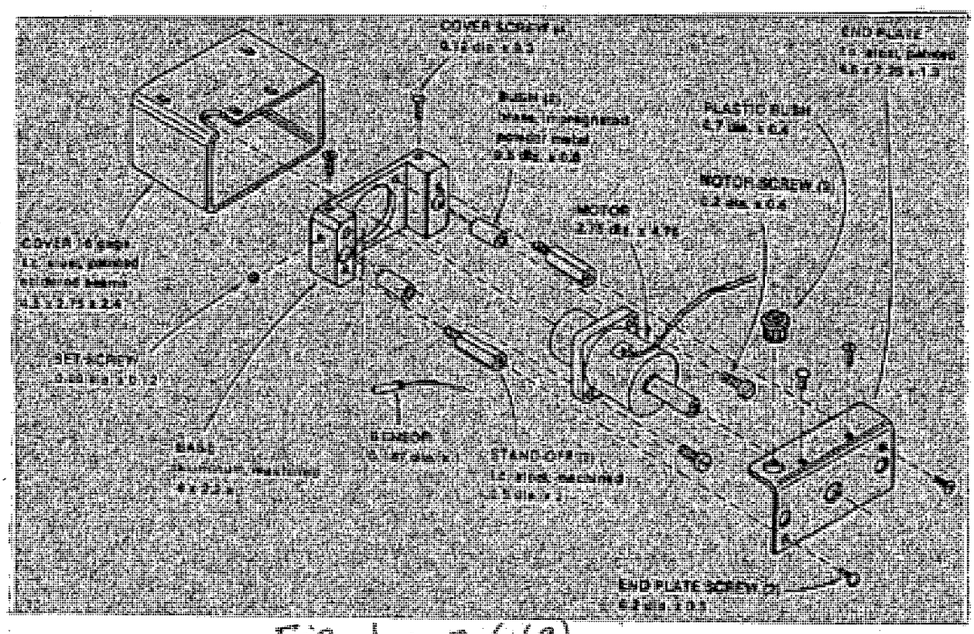

Fig. for Q. 6 (a)

(b) Discuss some applications of computer-aided design (CAD) software in product design. **(10)**

(c) What is the benefit of using standard components when designing and manufacturing of a product? **(10)**

7. (a) Describe reverse engineering and redesign methodology. **(10)**

(b) Explain briefly the product life cycle. **(10)**

(c) Do we need prototyping product design and development? What is the risk of prototyping? **(15)**

8. (a) How break even analysis can be used as a product screening tool? **(10)**

(b) How to design an environment friendly product? **(10)**

(c) Describe the causes of failure and their remedies which can occur in different life phase of a product. **(15)**
