Effect Of Additives On Rice Husk Briquette By Piston Press System

by

Manik Miah

MASTER OF SCIENCE IN MECHANICAL ENGINEERING

Department Of Mechanical Engineering

BANGLADESH UNIVERSITY OF ENGINEERING AND TECHNOLOGY

October 2017

CERTIFICATE OF APPROVAL

This thesis titled, **"Effect Of Additives On Rice Husk Briquette By Piston Press System"** submitted by **Manik Miah**, Roll No: **0412102031 F**, Session: **April'2012,** has been accepted as satisfactory in partial fulfillment of the requirements for the degree of **MASTER OF SCIENCE IN MECHANICAL ENGINEERING** on 29th October 2017.

BOARD OF EXAMINERS

Dr. Muhammad Mahbubul Alam Professor Department of Mechanical Engineering BUET, Dhaka-1000.	Chairman (Supervisor)
Head Department of Mechanical Engineering BUET, Dhaka-1000.	Member (Ex-officio)
Dr. M.A. Rashid Sarkar Professor Department of Mechanical Engineering BUET, Dhaka-1000.	Member (Internal)
Dr. Mohammad Arif Hasan Mamun Professor Department of Mechanical Engineering BUET, Dhaka-1000.	Member (Internal)
Dr. Md. Quamrul Islam Professor Department of Mechanical Engineering MIST, Dhaka.	Member (External)

CERTIFICATE OF RESEARCH

This is to certify that the work presented in this thesis is carried out by the author under the supervision of Dr. Muhammad Mahbubul Alam, Professor, Department of Mechanical Engineering, Bangladesh University of Engineering and Technology, Dhaka, Bangladesh.

Dr. Muhammad Mahbubul Alam
Countersigned by the Supervisor

Manik Miah
Signature by the Candidate

DECLARATION

This thesis titled, **"Effect of additives on rice husk briquette by piston press system"** is a presentation of my original research work. Wherever contribution of others are involved, every effort is made to indicate this clearly, with due reference to the literature and acknowledgement of collaborative research and discussion. It is hereby declared that this thesis or any part of it has not been submitted elsewhere for the award of any other degree or qualification.

The work was done under the guidance of Dr. Muhammad Mahbubul Alam, Professor, Department of Mechanical Engineering, Bangladesh University of Engineering and Technology, Dhaka, Bangladesh.

Author

Manik Miah
ID No: 0412102031

In my capacity as supervisor of the candidate, I certify that the above statements are true to the best of my knowledge.

Supervisor

Dr. Muhammad Mahbubul Alam
Professor
Department of Mechanical Engineering,
Bangladesh University of Engineering and Technology,
BUET, Dhaka-1000.

ACKNOWLEDGEMENT

Firstly, thanks to most merciful and kindest Almighty Allah. It is a great pleasure that I would like to express my most sincere heartfelt gratitude and reverence to my supervisor Dr. Muhammad Mahbubul Alam, Professor, Department of Mechanical Engineering, Bangladesh University of Engineering and Technology, for suggesting the topic for my thesis. I am greatly indebted to him for his constructive suggestions and criticism from time to time during the research works on progress.

I would like to thank the board of examiners of my thesis evaluation committee, Dr. Md. Quamrul Islam, Dr. Mohammad Ali, Dr. M.A. Rashid Sarkar and Dr. Mohammad Arif Hasan Mamun for their valuable comments and suggestions.

I express my gratitude and thanks to Mr. Abdul Awal and Mr. Mahbubur Rahman of fuel testing lab, for their kind co-operation during the testing of Briquette samples.

Special thanks goes on my friend Mr. Abdul Wadud, Mr. Khairul Bashar and Mr. Matiur Rahman for their support and encouragement.

Author

ABSTRACT

Energy crisis is now a major problem throughout the world. That is why renewable energy has gained much popularity day by day. Recent enormous researches are going on alternative fuel. In this respect, biomass briquette is a good illustration of renewable energy. It is a densified form of bio-fuel and has gained a large popularity in poor developing countries as an alternative cooking fuel. Within a shortest period it has replaced traditional fuels for its availability and high acceptance in user level. The aim of this thesis is to make a briquette making machine which can be run manually by hand operation without the aid of electricity considering the poor people of small income in remote areas. Also make a solar drier for drying the briquette sample. By making some biomass briquettes in mixing of different materials of different proportion with rice husk and observe the effect of their calorific values and other properties. All of the briquettes are produced in Lab with hand operation by briquette making machine. Combustion related properties such as percentage of volatile matter, percentage of ash content, percentage of fixed carbon content and calorific value of the briquettes are determined. The experiment shows that briquette produced from raw materials mixed with rice husk, saw dust and waste paper had the highest calorific value of 14.74 MJ/ Kg and its' calorific value is highest among all the briquette samples. In this mixed briquette samples production every case rice husk used more than 50% when mixed with other additives (raw materials). The procedures followed here are easy and cost effective. So this thesis paper might be helpful in production of briquette for the low income people to earn their livelihood easily and also make competitive with the existing briquette. It would be encouraged for the other people to involve them for increasing the production of briquette by using this easy technique.

TABLE OF CONTENTS

Page No.

Title Page i

Board of Examiners ii

Certificate of Research iii

Declaration iv

Acknowledgement v

Abstract vi

Table of Content vii

Nomenclature x

List of Tables xi

List of Figures xii

CHAPTER 1 INTRODUCTION

1.1 Introduction……..... 1
1.2 Objectives..……..... 3

CHAPTER 2 LITERATURE REVIEW. ……. ...……4

CHAPTER 3 ENERGY SCENARIO

3.1 Energy Scenario. …….....…….……..... 5
3.1.1 Estimated Available Energy …….……..... 5
3.1.2 Recent Energy Crisis in Bangladesh …….……..... 5
3.2 Alternative Sources of Energy ….……...……..... 6
3.2.1 Hydro-Power ..……..... 7
3.2.2 Wind Energy.……..... 9
3.2.3 Solar Energy ……..……..... 9
3.2.4 Bio-Energy ……..…….……..... 10
3.3 Economic Aspect of Biomass Briquette….....….……..... 11
3.3.1 Different Countries ……...…….……..... 11
3.3.2. Bangladesh ……...……..... 12
3.4 Environmental Impact of Biomass Briquette.....……..... 14

CHAPTER 4 BIOMASS DENSIFICATION

4.1 Definition of Biomass 16
4.2 Densification Process..... 16
4.3 Biomass Densification Technology 16
4.4 History of Biomass Densification Technology..... 17
4.5 Present Status of Biomass Densification Technology 18
4.6 Biomass Densification Technology in Bangladesh..... 19
4.7 Future Prospect of Biomass Densification Technology..... 21

CHAPTER 5 BRIQUETTE PRODUCTION SYSTEM

5.1 Biomass Briquette 23
5.2 Raw Materials Used in Biomass Briquette Production..... 23
5.3 Advantages of Biomass Briquette 24
5.4 Biomass Briquette Production System..... 24
5.4.1 Piston Press Densification Technique 25
5.4.2 Screw Press Densification Technique..... 25
5.4.3 Roll Press Densification Technique..... 25
5.4.4 Pelletizing Technique 25
5.4.5 Manual Presses and Low pressure Briquetting Technique 25
5.5 Problem Associated With the Present System 26
5.5.1 Supply and Quality of Grid Electricity 26
5.5.2 Short Life of Screw 26
5.5.3 Short Life of Die Heater 26
5.5.4 Short Life of Die Barrel 26
5.5.5 Main Bearing Problem 26
5.5.6 Health Problems of Operator or Mechanic 27
5.6 Cost Share 27
5.7 Economic Analysis 28
5.8 Comparing Between the Existing System and Proposed System 28

CHAPTER 6 EXPERIMENTAL SET UP

6.1 Briquette Making Machine 29
6.1.1 Components of Briquette Making Machine..... 30
6.2 Solar Drier 35
6.2.1 Components of Solar Drier Arrangement..... 35
6.3 Load Calculation 36
6.4 Calculation of Briquette Samples Equivalent Weight 37

CHAPTER 7 SAMPLE PREPARATION AND EXPERIMENTAL OBSERVATIONS

7.1 Preparation of the Briquette Sample 39
7.2 Percentage of Moisture Content 45
7.3 Percentage of Volatile Matter 45
7.4 Percentage of Ash Content 46
7.5 Percentage of Fixed carbon Content 46
7.6 Calorific Value 46
7.7 Observation of Weight Decreasing..... 47

CHAPTER 8 RESULTS AND DISCUSSION

8.1 Results..... 48
8.1.1 Effect on Density of Different Samples..... 48
8.1.2 Effect on Calorific Value of Different Samples..... 49
8.1.3 Effect on Percentage of Moisture Content of Different Samples..... 50
8.1.4 Effect on Percentage of Volatile Matter of Different Samples 51
8.1.5 Effect on Percentage of Ash content of Different Samples 52
8.1.6 Effect on Percentage of Fixed carbon Content of Different Samples..... 53
8.1.7 Effect on Aspect Ratio..... 54
8.1.8 Effect on Water Quantity..... 55
8.1.9 Effect of Solar Drier for Different Samples..... 56
8.1.10 Wet Samples and Dry Samples Weight Comparison..... 57
8.2 Comparing Between Rice husk briquette Sample and Rice husk mixed with other Briquette Samples 57
8.3 Effects on Economy, Health and Environment..... 58
8.4 Discussion 58

CHAPTER 9 CONCLUSION..... 59

CHAPTER 10 OBSERVATIONS AND FUTURE RECOMMENDATION

10.1 Observations..... 60
10.2 Future Recommendation..... 61

REFERENCES 62
APPENDICES 64

NOMENCLATURE

Serial No	Property	Unit
1	Pressure	1 Mega Pascale = 10^6 Pascles
2	Length	1 micron = 10^{-6} meter
3	Length	1mm= 10^{-3} meter
4	Volume	1 Tcf = 1 Trillion cubic feet = 10^9 cubic feet
5	Mass	1 Metric Ton or Ton = 1000 Kg
6	Mass	1 mon (Local Unit) = 40 Kg
7	Mass	1 gm = 1 grams = 10^{-3} kilograms
8	Density	1 Kg/m3 = 1 kilogram per meter^3
9	Temperature	1°C = 1 Degree Celsius
10	Temperature	Temp.
11	Gram	gm
12	Time	Mins = Minutes
13	Compressive strength	1 MPa = 1 Mega Pascal = 10^6 Pascal
14	Calorific value	1 cal/gm = 1 Kcal/Kg = 0.0041858 KJ/gm
15	Energy	1 MW= 1 Mega Watt = 10^6 Watt
16	Energy	1 kwh = 1 kilo watt hour = 1 unit
17	Energy	1 PJ = 10^9 MJ
18	Energy	Cal = calorie
19	Currency	1 USD = 79 Taka (BDT or Tk)
20	Green House Gas	GHG
21	Million Tonnes Equivalent Oil	mteo
22	Billion Cubic Meter	BCM
23	Trillion Cubic Feet	TCF

LIST OF TABLES

TABLE NO. Page

1 Composition of Different Samples and Analysis of their Properties……..……..... 64
2 Density of Different Samples ……..... 64
3 Percentage of Moisture Content of Different Samples..……..……....……..... 65
4 Percentage of Volatile Matter of Different Samples ……..……..... 65
5 Percentage of Fixed Carbon Content of Different Samples……..... 66
6 Percentage of Ash Content of Different Samples..……..……..…..... 66
7 Calorific Value of Different Samples ……..……..... 67
8 Percentage of Hydro Power in Different Countries..……...……...……..... 67
9 Share of Biofuel Production by Region in Percentages (%)……..…..... 67
10 Aspect Ratio and Equivalent Weight..…..……..……..……..... 68
11 Quantity of Water ……..……...……..……..…..…..... 68
12 Weight Decreasing(gm) of Different Samples)……...…...……..... 68
13 Determination of Calorific value for the Sample No. 1……..... 69
14 Determination of Calorific value for the Sample No. 2……..... 71
15 Determination of Calorific value for the Sample No. 3……..... 72
16 Determination of Calorific value for the Sample No. 4……..... 74
17 Determination of Calorific value for the Sample No. 5……..... 75
18 Determination of Calorific value for the Sample No. 6……..... 77
19 Determination of Calorific value for the Sample No. 7……..... 79
20 Determination of Calorific value for the Sample No. 8……..... 80
21 Determination of Calorific value for the Sample No. 9……..... 82
22 Determination of Calorific value for the Sample No. 10……..... 83
23 Determination of Calorific value for the Sample No. 11……..... 85
24 Determination of Calorific value for the Sample No. 12……..... 87
25 Determination of Calorific value for the Sample No. 13……..... 88
26 Determination of Calorific value for the Sample No. 14……..... 90

LIST OF FIGURES

FIGURE NO. Page

3.1 Hydro Power Energy Consumption By Different Countries 8
3.2 Share of Biofuel Production by Region in Percentages(%)..... 11
3.3 Map of Bangladesh 13
4.1 Sylhet Division Map..... 21
6.1 Briquette Making Machine 29
6.2 Briquette Making Machine Parts..... 31
6.3 Briquette Making Machine Parts..... 32
6.4 Briquette Making Machine Parts 33
6.5 Briquette Making Machine Parts..... 34
6.6 Solar Drier 35
6.7 Solar Drier Parts..... 36
7.1 Briquette Sample No. 1..... 39
7.2 Briquette Sample No. 2..... 39
7.3 Briquette Sample No. 3..... 40
7.4 Briquette Sample No. 4..... 40
7.5 Briquette Sample No. 5..... 41
7.6 Briquette Sample No. 6..... 41
7.7 Briquette Sample No. 7..... 41
7.8 Briquette Sample No. 8..... 42
7.9 Briquette Sample No. 9..... 42
7.10 Briquette Sample No. 10..... 43
7.11 Briquette Sample No. 11..... 43
7.12 Briquette Sample No. 12..... 44
7.13 Briquette Sample No. 13..... 44
7.14 Briquette Sample No. 14..... 44
7.15 Oven..... 45
7.16 Carbolite Box Furnace..... 45
7.17 Oxygen Bomb Calorimeter Arrangement..... 47
7.18 Solar Drier for Observation of Weight Decreasing..... 47
8.1 Comparison of Density of Different Samples..... 48
8.2 Comparison of Calorific Value of Different Samples..... 49
8.3 Moisture Content (%) of Different Samples..... 50
8.4 Volatile Matter (%) of Different Samples..... 51
8.5 Ash Content (%) of Different Samples..... 52
8.6 Fixed Carbon Content (%) of Different Samples..... 53
8.7 Aspect Ratio vs Equivalent weight of Different Samples..... 54
8.8 Quantity of Water requires for Different Samples..... 55
8.9 Weight Decreasing of Different Sample by using Solar Drier..... 56
8.10 Wet Samples vs Dry Samples Weight Comparison..... 57

CHAPTER: 1
INTRODUCTION

1.1. Introduction

Energy, one of the indispensable needs for human being and it plays a significant role for the development of a country. The energy demand of the entire world is getting more and more since this is needed to raise and satisfy the standard of living. Nations consuming more energy per capital always have better standard of living. Energy consumption pattern of any country indicates the state of socio-economic development. It is obvious that most of the world's main conventional energy sources are natural gas, oil, coal etc. It is about 35% of world's primary energy consumption comes from natural gas. According to BP statistical review of world energy consumption published in June 2017 total primary energy consumption increased 1% in 2016, following growth recorded 0.9% in 2015 and 1% in 2014. This comparison is with 10 years average of 1.8% a year.

However, from the BP report 2017 renewable energy source contributes only about 14.1% of total primary energy consumption. Therefore, emphasis has been given to utilize the renewable energy as to prevent the eminent depletion of indigenous non-renewable energy sources. Biomass is considered as the prestigious source of renewable energy in Bangladesh as well as in the world. Biomass briquette is the product of biomass densification technology. It is a compacted form of solid fuel in which raw materials are compressed with the application of pressure to increase density. It is also known as biomass densified fuel [1]. It reduces the volume to weight ratio, thus making transportation and storage easy for efficient domestic or industrial use. Some briquettes made from wood charcoal mixed with other raw material have a calorific value of 3500 kcal/kg. Biomass briquette is produced from various kinds of raw materials. The most common raw materials are rice husk, saw dust, forest residues, paper pulp etc. Biomass briquettes have vast applications both in developed and developing countries.
In developed countries, biomass energy is mainly used for space heating and power generation. Most of the developing countries, due to rapid growth of commercial energy consumption traditional fuels in the total national energy usage have been reduced. However, biomass energy in the total energy consumption has been rising in developed countries day by day [2]. Globally, biomass is the fourth largest energy resource after coal, oil and natural gas and it estimated at about 14% of global primary energy [3]. Its production is comparatively easy and is suitable for small or large applications comparing other fuel like diesel or petrol.

Utilization of agricultural residues is often difficult due to their uneven characteristics. Most of the developing countries produce huge quantities of agricultural waste but they cannot use those efficiently. Moreover, the process causes extensive pollution to the

environment [4]. Briquette from agricultural waste helps to solve the problem of residue disposal and reduces deforestation by providing a substitute for fuel wood [5]. Biomass energy is eventually sustainable and relatively environment friendly source of energy. Recently, Fossil fuels provide about 80% of man's energy usage now compared to other energy sources [6]. Rapid rate of fossil fuel utilization releases enormous amount of CO_2. At present, above 60% of the greenhouse effect is enhanced by CO_2 [7]. Moreover, biomass absorbs the same amount of CO_2 in growing that it releases when burned as a fuel. In this way, biomass is carbon dioxide neutral source on sustainable basis utilization [8]. Additionally, biomass fuels have a minimum contribution to acid rain as they contain negligible amount of sulfur [9]. Thus, the substitution of fossil fuels for energy production with biomass will result in a net reduction in greenhouse gas emissions [10]. It is expected that biomass energy will be a cost-effective and sustainable option to meet 50% of world energy demands for reducing of carbon emissions from fossil fuels during the next century [11].

Developing countries like Bangladesh, most of the rural people along with a large portion of urban people use biomass energy either directly or indirectly to meet the increasing energy demand. Direct consumption involves cooking, space heating and industrial processes. In Bangladesh, briquettes are mainly used as a fuel for cooking purpose. Nevertheless, indirect consumption includes more advanced processes of converting biomass into secondary energy [12]. However, the existing briquette producing machine uses electrical power for drying. This made a large proportion of its cost since heating by electrical energy is very inefficient and Bangladesh has shortage of electrical power generation. Thus to reduce cost and dependency on electricity, modification of raw materials and the machine would be necessary. For the rural community, where electricity is unavailable, this modified briquette making machine could be used extensively. From the produced briquette, different properties like calorific value, carbon content, density, moisture content, ash content would be examined. Finally, cost analysis would be done.

As there are lot of limitations in briquette production technology, these limitations may decrease with the help of new technique. So, continuous works are being done to identify the problems associated with it and solve them. Latest technologies also applied to this sector especially in developed countries which is being done in developing countries too.

1.2. Objectives

The main objectives of this research work are to understand the overall scenario of briquette technology and to make the biomass briquette and also it's potential in Bangladesh. Some important objectives are discussed as below:

1. To study the existing design to identify the problems associated with present systems.
2. To find an easy technique by which biomass briquette can be produced through hand operation without use of electricity.
3. Different types of composition with rice husk, sawdust, mustard oil cake, sesame oil cake, nigella seed oil cake and waste paper in various proportions are used for briquette sample to observe their different types of properties like Moisture content, ash content, calorific value, volatile matter and compare them with each other.
4. To determine the cost share of briquette (materials cost, transportation, labor, electricity, storage etc.)
5. By comparing the outcome of this research work with the rest of the world and it can be determined the present condition of Bangladesh with respect to others.
6. To determine the limitations of this technique and provide a recommendation at the end of this work for further development of this system.

CHAPTER: 2
LITERATURE REVIEW

Generally, a briquette is a block of compressed coal, biomass or charcoal dust that is used as fuel to start and maintain fire. Briquetting is a mechanical compaction process to increase the density of bulky materials. This process is used for forming fine particles into a designed shape. It can be regarded as a waste control measure in the case of production of briquettes from agricultural wastes. However, depending on the material of interest, briquetting can be used to provide fuel source as a preventive measure to many ecological problems. Briquetting is a high-pressure process which can be done at elevated temperature or at ambient temperature depending on the technology one wants to employ [13].

During this process, fine material is compacted into regular shape and size which does not separate during transportation, storage or combustion. In some briquetting techniques, the materials are simply compressed without addition of adhesive (binderless briquettes) while in some, adhesive material is added to assist in holding the particles of the material together [14].

Generally, briquetting process has focused more on the production of smokeless solid fuels from coal and agricultural wastes. There are various techniques which have been used to produce smokeless solid fuel from coal. The most common technique is the use of roller press using only moderate pressure and binder. Note that the machines employed for this process are also used to make other kind of non-fuel briquettes from inorganic materials such as metal ores. However, briquetting of organic materials (agricultural wastes) requires significantly higher pressure as additional force is needed to overcome the natural springiness of these materials. Essentially, this involves the destruction of the cell walls through some combination of pressure and heat.

Various briquetting machines have been designed, ranging from very simple types which are manually operated to more complex ones mechanically or electrically powered. Generally, briquetting operations have developed in two directions, mechanically compression (hydraulic or pistons) and worm screw pressing types. In Bangladesh Mr. Hyatullah of Sylhet division imported a machine from Taiwan and installed in his rice mill premises and this was the first densification machine. Some works have been done by Dr. Nowsher Ali Moral, Dr. Ahiduzzaman and many others to improve the production quality and determine socio-economic aspect of biomass briquette in Bangladesh [15]. From P.k Halder and N.Paul assessment of biomass energy resources and related technologies practice in Bangladesh found the potential of biomass energy in Bangladesh. [16]

CHAPTER: 3
ENERGY SCENARIO

3.1. Energy Scenario

From the energy scenario the energy consumption pattern of different countries can be known and it can be predicted for future energy consumption which will be helpful for the efficient use of energy.

3.1.1. Estimated Available Energy

According to BP statistical review report published in June 2017 shows that primary energy grew by just 1% (171 mtoe) in 2016, which was almost half the average rate seen over the previous 10 years. That was the third consecutive year in which energy consumption had grown by 1% or less, with energy intensity. Growth in energy consumption was again driven by the developing economies like China (1.3%, 47 mtoe) and India (5.4%, 39 mtoe) lead the way, contributing almost identical increments and together accounting for around half of the increase in global demand. Renewable energy (including biofuels) (12%, 55 mtoe) was again the fastest growing energy source, accounting for almost a third of the increase in primary energy, despite having a share of only 4%. That said, oil (1.5%, 75 mtoe) actually provided the largest contribution to growth, with the low level of oil prices boosting demand. Natural gas (1.5%, 57 mtoe) grew at the same rate as oil, although for gas that was consider slower than its 10-year average. [17]

From the BP statistical review report 2017 it is seen that at the end of 2016 remaining proved reserved for natural gas was about 6588.8 TCF whereas highest reserve in Iran and it was about 1183 TCF and in Bangladesh it was about 7.3 TCF. World natural gas consumption grew by 63 bcm than previous year. World total proved reserves for coal at the end of 2016 was about 1139331 million tonnes whereas highest reserves found in USA among all the countries and it was about 251582 million tonnes. But consumption of coal decreased about 53 mtoe than previous year. At the end of 2016 total consumption of renewable energy was 419.6 mtoe whereas highest consumption was in china and it was 86.1 mtoe. [17]

3.1.2 Recent Energy Crisis in Bangladesh

In Bangladesh crisis of power is one of the major problems. The gap between demand and production is increasing day by day. The demand of electricity cannot not be met due to insufficient generation of electricity around the country. At present, 55% of the total electricity generation of Bangladesh is from the power plants under public sector and 40% of the net-generation of the country is from private sector. In public sector, most of our power stations of the country have become very old and they are operating lower than

their rated capacity with derated machineries. As a result of the power crisis, degradation of the fossil fuel resource, deforestation, environmental pollution is going on which is causing natural disasters. Even though many extra units both from public and private sector have been added to the national grid, the power crisis is still a big issue in the country. Moreover, most of our power stations depend on natural gas as a fuel it is about 68.63% of total power according to BPDB annual report for FY 2015-2016. Because of the shortage of gas supply some power plants kept stop sometimes. In most cases, we have failed to use our national resources to get maximum power output. According to this report beside natural gas based power plants, other power plants such as hydro-electric power is only 1.84% and coal based plant generate 1.62%. Moreover, diesel power plants generate 3.96% and furnace oil based power plant generates 16.62 % around the country. Power imports7.32%. But the insufficient gas supply has decreased the power generation capacity in the whole country. According to Bangladesh power development report FY 2015-2016, the peak demand of electricity was about 11,405 MW per day but generation capacity was about 9,036 MW [18]. So, there is a crisis for electricity causes load shedding. But, it is good news that the Govt. takes master plan for increasing the power generation. As a result, setting up new power plant to meet the demand with a vision 2021 of digital Bangladesh and electricity for all.

Rural level domestic users mainly relies on fire wood and kerosene stove for cooking but scarcity of fuel wood and hiking of kerosene price is also forcing them to look for a substitute. As we have limited reserve of gas and the store of oil and coal is almost negligible. It mostly depends on imported fuels for its daily needs. Fuel prices are escalating rapidly in world market creating high pressure on the country's economy. Thus the country is desperately looking for alternative energy sources. Sustainable social and economic development depends on adequate power generation capacity of a country. There is no other way for accelerating development except to increase the power generation by fuel diversification. Development of Renewable Energy is one of the important strategies adopted as part of Fuel Diversification Program. In line with the Renewable Energy policy 2009, the Government is committed to facilitate both public and private sector investment in renewable energy projects to substitute indigenous non-renewable energy supplies and scale up contributions of existing Renewable Energy based electricity productions. The Renewable Energy Policy envisions that 5% of total energy production will have to be achieved by 2015 and 10% by 2020. So, biomass energy may be a good potential alternative for this country.

3.2. Alternative Sources of Energy

Normally, alternative energy as it is currently conceived is that which is produced or recovered without the undesirable consequences inherent in fossil fuel use, particularly high carbon dioxide emissions, is an important factor in global warming. According to sustainable and renewable energy development authority (SPREDA) the Bangladesh Government had announced a renewable energy policy and also a plan to increase its share in power generation to 10 percent by 2020.That means the country's power

production from renewable energy is to near about 650 MW in 2015 when the total power generation is about to 13,000 MW.

As we know that renewable energy helps in poverty elevation, aid in energy shortage and environmental degradation such as desertification, biodiversity depletion and climate change. Though over-exploitation of biomass in meeting the need of energy in the rural areas is causing environmental degradation but it helps to solve those problems. It is expected that primarily biomass energy widely used in the rural Bangladesh where most of the people lived.

Power generation in Bangladesh was almost mono-fuel dependent, i.e. indigenous natural gas considering its apparent huge availability. According to SREDA about 89% of power previously comes from natural gas and the rest is from liquid fuel, coal and hydropower. Nowadays share of renewable energy is increasing.

However, in recent years, it was evident that actual scenario is other way round and adequate supply of natural gas has been at stake due to depleting existing gas reserves. The uncertainty has been constraining development of further gas based power generation expansion program. Taking this into consideration the government has prepared "Power System Master Plan 2010" to develop a energy balanced sustainable power system in the country. According to the new generation expansion plan substantial proportion is from liquid and coal based. In that case the scenario will be changed significantly. Development of renewable energy is one of the important strategies adopted as part of Fuel Diversification Program. According to the plan 15% of total electricity generation will come from renewable and new energy sources.

For the commercial use of renewable energy in sustainable manner is still a great challenge for Bangladesh as in other part of the world. As a result, Bangladesh government has taken a systematic approach towards renewable energy development. The initiative includes development of awareness, legal and regulatory framework, institutional development and financing mechanism to drive the sector. Regarding for this government approved Renewable Energy Policy in 2008. Through this policy the government is committed to facilitate both public and private sector investment in renewable energy projects to substitute indigenous non- renewable energy supplies and scale up contributions of existing renewable energy based electricity productions. The Policy envisions 5% of total generation from renewable sources by 2015 and 10% of the same by 2020.

3.2.1. Hydropower

In the recent years, Hydropower provides a significant amount of energy throughout the world. It has been deployment that more than 100 countries, contributing approximately 15% of the global electricity production. According to the world energy resources 2016 hydropower is the leading renewable source for electricity generation over the world, supplying 71% of all renewable electricity. By reaching 1064 GW of installed capacity in 2016, it generated 16.4% of the global electricity from all sources [19]. As hydropower

has good synergies with all generation technologies, its role is expected to increase in importance in the electricity systems of the future. This is especially true of pumped hydro used as storage, but also increasingly to balance the volatility caused by increased renewable energy in the system. Consideration of water management benefits offered by hydropower facilities includes flood control, water conservation during droughts or arid seasons.

Global growth in installed capacity of hydropower has been concentrated in the emerging markets in Asia and South America, where increased access to electricity and improved reliability are major requirements to support rapid economic development.

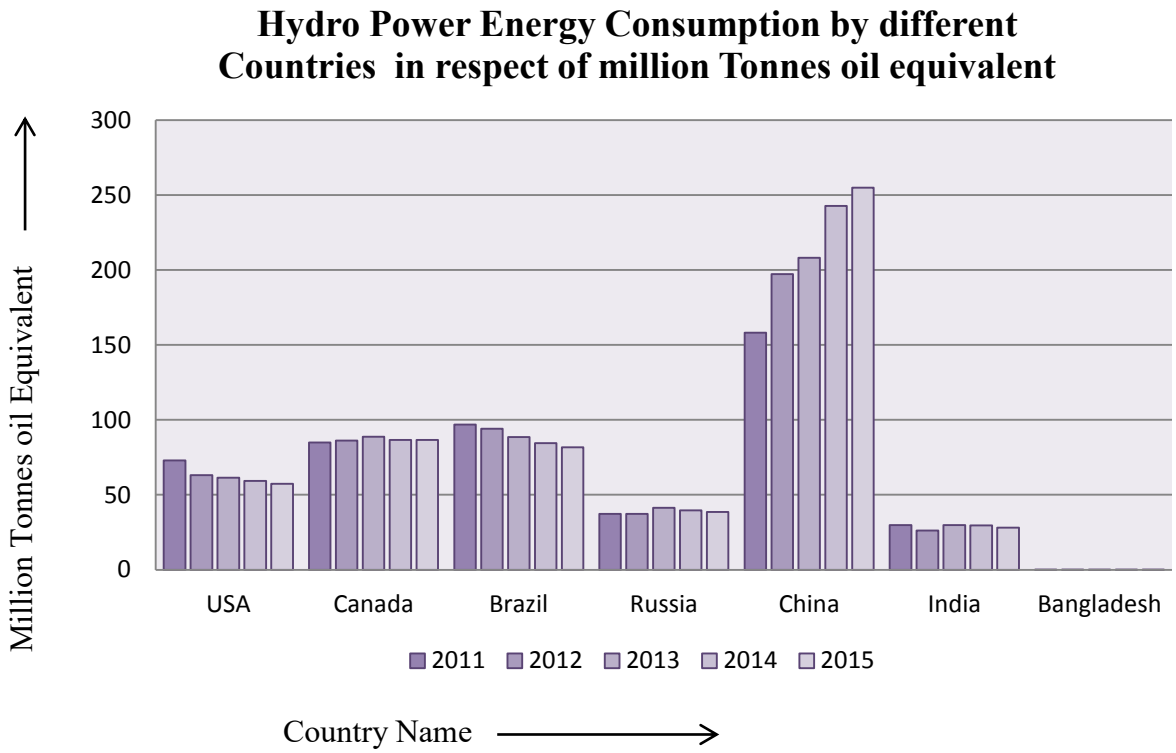

Fig: 3.1: Hydro Power Energy Consumption By Different Countries (BP 2016)

From the above diagram it can be seen that, in recent years, the consumption of hydro power in different countries increasing. Among all of the countries generation of hydro power energy in China increasing rapidly. In many countries takes initiatives for the increasing demand for the security of supply of both water and energy continues to drive hydropower development on a regional basis. Hydropower operators are seeing increased trans-boundary collaboration in the development and operation of hydropower projects, and in regional interconnections to enable the cross-border sale of the resulting electricity. In many cases, this cooperation brings benefits in terms of improved energy access in one or more country, economic opportunities, and improved water services.

3.2.2. Wind Energy

Wind power or wind energy is the energy extracted from wind using wind turbines to produce electrical power, windmills for mechanical power, wind pumps for water pumping, or sails to propel ships. Wind power, as an alternative to fossil fuels, is plentiful, renewable, widely distributed, clean, produces no greenhouse gas emissions during operation and uses little land. The effects on the environment are generally less problematic than those from other power sources.

Wind Energy represents the fastest growing technology in the energy production space globally today. Energy is generated from wind in 79 countries around the world and 24 of the countries today already have installed capacity of more than 1000MW. Within the low carbon energy generation technologies, wind has emerged as the top technology of choosing, investors are becoming increasingly comfortable backing wind investments. Wind energy not only a mainstream energy sector but is already a global industry with large international players dominating the industry. In most parts of the world where generation sources compete on the basis of market reflective pricing of electricity, wind is beginning to offer stiff competitions to the other most preferred low fossil intensity technology gas fired CCGT technology.

Wind power is very consistent from year to year but has significant variation over shorter time scales. As the proportion of wind power in a region increases, a need to upgrade the grid, and a lower ability to supplant conventional production can occur.

World wind power generation capacity has reached 435 GW at the end of 2015, around 7% of total global power generation capacity. A record of 64 GW was added in 2015. The global growth rate of 17.2% was higher than in 2014 (16.4%). Global wind power generation amounted to 950 TWh in 2015, nearly 4% of total global power generation. Some countries have reached much higher percentages. Denmark produced 42% of its electricity from wind turbines in 2015, the highest figure yet recorded worldwide. In Germany wind power contributed a new record of 13% of the country's power consumption in 2015. [19]

3.2.3. Solar Energy

Solar energy is the most abundant energy resource and it is available for use in its direct (solar radiation) and indirect (wind, biomass, hydro, ocean etc.) forms. About 60% of the total energy emitted by the sun reaches the Earth's surface. Even if only 0.1% of this energy could be converted at an efficiency of 10%, it would be four times larger than the total world's electricity generating capacity of about 5000GW [20]. The use of solar energy is growing strongly around the world.

We know that solar power falls on the planet's surface. While it is not possible to capture all, or even most, of this energy, capturing less than 0.02% would be enough to meet the current energy needs. Barriers to further solar generation include the high price of making solar cells and reliance on weather patterns to generate electricity. Also, current solar

generation does not produce electricity at night, which is a particular problem in high northern and southern latitude countries; energy demand is highest in winter, while availability of solar energy is lowest. This could be overcome by buying power from countries closer to the equator during winter months, and may also be addressed with technological developments such as the development of inexpensive energy storage. Globally, solar generation is the fastest growing source of energy, seeing an annual average growth of 35% over the past few years. Japan, Europe, China, U.S. and India are the major growing investors in solar energy. In Bangladesh the country is blessed by considerable solar radiation. Bangladesh receives an average daily solar radiation of 4-6.5 kWh/m^2. Solar photovoltaic (PV) are gaining acceptance for providing electricity to households and small businesses in rural areas. Development of off-grid solar home solutions has achieved international benchmark.

According to SREDA website from a survey, In Bangladesh has an existing market size of 6 million households for Solar Home Systems (SHS) on a fee-for-service basis in the off-grid areas of Bangladesh. At present the national grid is serving 64% of our total population. Nearly 10,000 rural markets and commercial Centre's in the country is still out of grid which are excellent market for centralized solar photovoltaic plants. Throughout the country, different government administrative offices, NGO offices, Health Centers, Schools, banks, police stations etc. are functioning. In the off-grid locations, these offices are either using traditional means (lantern, candles, kerosene wick lamps etc.) or operating their own diesel generator to cater there lighting need.

3.2.4. Bio-Energy

According to the World Energy Council bioenergy is to include traditional biomass (i.e. forestry and agricultural residues), modern biomass and biofuels. Which represents the transformation of organic matter into a source of energy, whether it may be collected from natural surroundings or specifically grown for the purpose. In developed countries, bioenergy is promoted as an alternative or more sustainable source for hydrocarbons, especially for transportation fuels, like bioethanol and biodiesel, the use of wood in combined heat and power generation and residential heating. In developing countries bioenergy may represent opportunities for domestic industrial development and economic growth. In least developed countries traditional biomass is often the dominant domestic fuel, especially in more rural areas without access to electricity or other energy sources. There are multiple challenges and opportunities for bioenergy as a potential driver of sustainable development, given enough economic and technological support.

Bioenergy is the largest renewable energy source with 14% out of 18% renewables in the energy mix and supplying 10% of global energy supply. In comparison with other energy sources, biomass can be converted into solid, liquid and gaseous fuels. It is expected that biomass is shifting from a traditional and indigenous energy source to a modern and globally traded commodity. The consumption pattern varies geographically with biofuels in being dominant in the Americas, fuel wood and charcoal in Asia and Africa and combined heat and power generation in Europe. The primary energy supply of forest

biomass used worldwide is estimated at about 56 EJ and overall woody biomass provides about 90% of the primary energy annually sourced from all forms of biomass. Wood is also the source of more than 52 million tonnes of charcoal used in cooking in many countries and for smelting of iron and other metal ores. [21]

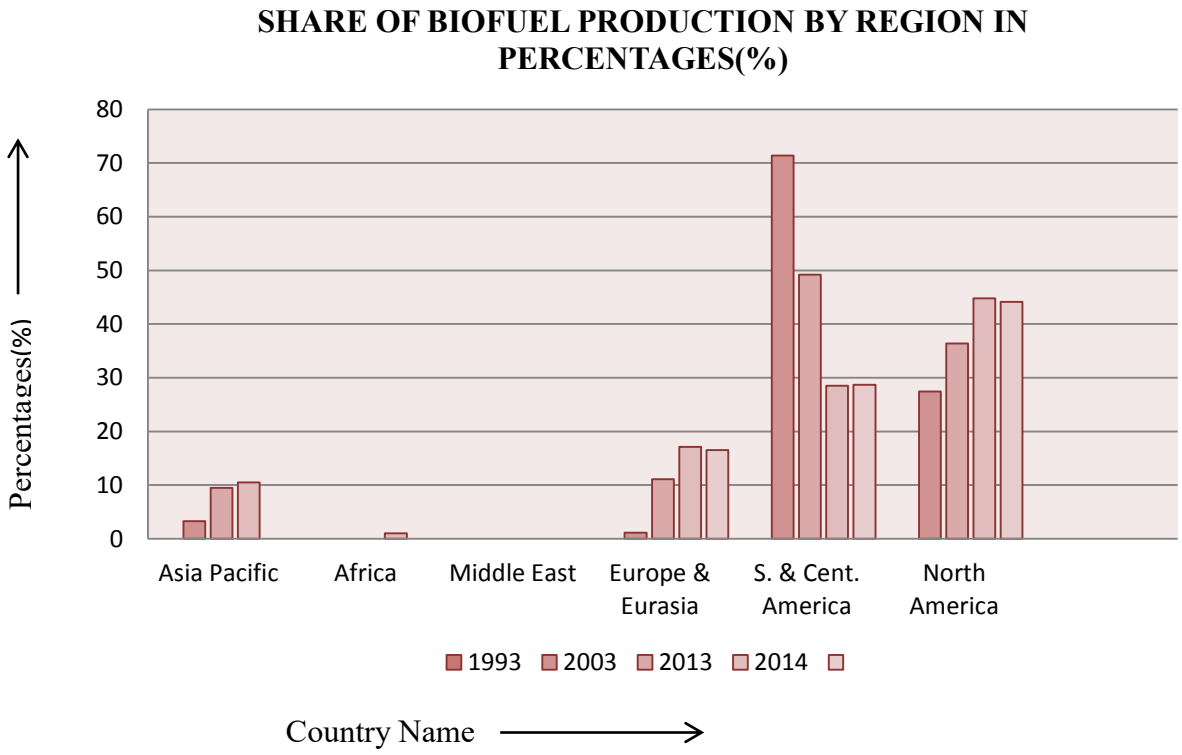

Fig: 3.2: Share of Biofuel Production by region in Percentages (%)

From the above graph it is shown that, In Asia pacific region the percentage of production of biofuel energy is increasing every year. In Africa started to production in 2014. The production percentage in Europe & Eurasia, S. & Central America & North America also very well.

3.3. Economic Aspect of Biomass Briquette

3.3.1. Different Countries

High-pressure briquetting plants are costly, because the equipment needs to withstand the pressures involved. For example, a typical piston press from India with a 65 kW motor costs about US$17,000, and the whole plant (including driers, grinders and handling equipment as well as the press) costs about US$50,000. Such a plant produces about 700 kg/hour of briquettes, or about 1,500 tons per year. In India, production costs about US$60 per ton, although this varies depending on the cost of the agricultural residues.

The price that briquettes can fetch depends on the price of the fuels that they replace. In India the price is typically US$80 per ton delivered, to replace coal or LPG. Briquette use is more attractive to restaurants than schools because schools can buy

subsidized LPG. In Uganda wood costs about US$140 per ton and briquettes can fetch US$160 per ton because they are more convenient to use and easy to store.

The cost of making wood pellets in Europe and USA is about U$130 per ton, but they can be sold for US$290 per ton to replace natural gas for heating. A small pellet machine capable of 450 kg/hour costs about US$11,000, but a complete automated plant with driers, grinders and handling equipment is much more expensive. [22]

3.3.2. Bangladesh

Briquette is gradually gaining popularity in Bangladesh due to lower price, for household as well as commercial cooking Purpose. Fixed and low income people of Bangladesh are taking briquette as an alternative fuel because of escalating prices of liquefied petroleum gas (LPG).

Generally, in Bangladesh in conventional system about Taka 40000 to 50000 is required for setting up a briquette manufacturing company in the preliminary stage. In proposed system it is possible to setup within Taka 5000 and there is not needed any electricity. Production cost only material & labour cost only. Where the production cost is lower than usual but only disadvantage is production rate is lower than existing system. In the proposed system the poor people of rural area with lower income group will be more beneficial which will helpful in developing social life. However, in Bangladesh some areas where briquettes are already producing in conventional systems are pointed in the map of Bangladesh. It is spreading more new areas day by day.

Fig: 3.3: Map of Bangladesh

3.4. Environmental Impact of Biomass Briquette

Environment is very important for us to live well. We know that, the agricultural and forestry processing residues such as rice husk, rice straw, jute stick, sawdust, bagasse and other residues account for a significant share in the total energy consumption in Bangladesh. The major limitation in utilization them for energy is their low bulk densities and high moisture content. Biomass briquetting technology can transform these lose biomass into dry, solid briquettes of regular shape, which can be easily stored and transported.

There are some positive and also some negative impact of biomass briquette on environment, they are discussed as below:

Positive Impact:

- Generally, Biomass Briquette is accepted as a "green" fuel for energy production where carbon dioxide emissions are much lower than for fossil fuels.
- Production of Briquette turns waste materials into fuel source. As a result, it is attractive for its sustainable process. Depending on materials used to make the briquettes, they may burn cleaner than charcoal and firewood.
- Emissions from biomass plants comparatively lower than other source of energy. This emission can be controlled with utilizing improved technology.
- Briquettes from sawdust can be a good use of wood waste utilization with appropriate technology. It saves trees that can prevent soil erosion and desertification by providing an alternative to burning wood for domestic and industrial heating and cooking.
- Briquette substitutes sawmilling waste for a valuable resource. It improves health by providing a cleaner burning fuel and also provides a better alternative to firewood (40% more efficient, longer burning and better) as well as helping to protect the environment by reducing the number of trees cut for firewood.
- Briquettes made from sawdust can reduce forest degradation and deforestation.
- It is secure to use biomass briquette.
- The conversion of sawdust in the briquette factory could potentially save about 5,600 tonnes of trees/year that would have been cut from the forest.
- The adoption of sawdust briquetting nationwide could be of immense benefit to any country in terms of climate change mitigation.
- Use of briquettes as a substitute for firewood can help the rural women who spend considerable time and energy collecting firewood.

Negative Impact:

- In Nigeria, the high and rapid demand for wood fuel consumption is considered as a major contributing factor to the fuel wood crisis. The demand for fuel wood is expected to have risen to about 213.4 x103 metric tonnes, while the supply would have decreased to about 28.4 x10 metric tonnes by the year 2030 [23].
- Large areas of land are already committed to growing energy crops and looks set increase. Understanding the impact of these crops on the environment is vital.
- The impact of forestry management and the farming of biomass crops is a major issue.
- Many of the developing countries produce huge quantities of agro residues but they are used inefficiently causing extensive pollution to the environment.
- The direct burning of loose biomass in conventional grates is associated with very low thermal efficiency and widespread air pollution.
- In biomass the conversion efficiencies are as low as 40% with particulate emissions in the flue gases in excess of 3000 mg/Nm^3. In addition, a large percentage of un-burnt carbonaceous ash has to be disposed of. This lead a bad impact on environment

CHAPTER: 4
BIOMASS DENSIFICATION

4.1. Biomass Definition

According to Oxford English Dictionary, it was in 1934 that the term “Biomass” was first approved in literature. In journal of Marine Biology association, Russian Scientist Bogorov used Biomass as nomenclature [16]. Basically, Biomass is the matter that can be derived directly or indirectly from plant which is utilize as energy or materials as a substantial amount. Where, Biomass is called as “Phytomass” and is often translated to bio-resource or bio-derived resource. The resource based on various agricultural, forestry and industrial residues and process waste, sewages and animal waste which make the large scale energy plantation will be one of the most promising biomass. Specifically, biomass means wood, rice husk, saw dust, paper pulp, rape seed, kitchen garbage, animal dung etc. It may also define as a biomass briquette is a block of flammable matter which is used as fuel to start and maintain a fire.

4.2. Densification Process

Due to low density of biomass materials poses a challenge for the handling, transportation, storage and combustion processes. These problems may be addressed through densification, a process that produces either liquid or solid fuel with denser and more uniform properties than the raw biomass.

4.3. Biomass Densification Technology

Biomass densification technology is an easy technique which is used for the production of densified biofuel that is a well-known alternative fuel throughout the world. This densification technology is used for compacting of low bulk density material into a product of high density material. It indicates the technology used in the process whereas biomass in the form of small particles such as straw, sawdust or chips, is concentrated by machines into small pellets or briquettes. Depending on the type of machine used, this process increases the bulk density of the biomass by about 10 to 12 times its original bulk density. It provides improved transportation and better storage of the biomass product. It is also economic. In the recent years this technology focusing throughout the worldwide as a technique for beneficiation of residues utilization as energy source. To meet the demand of alternate fuel against the recent energy crisis, this technology is being adopted by many countries at present. Research is being promoted on this technology to improve its easy production system and better performance. So this technology is also regarded as one of the easiest technologies at present. Nowadays it is equally popular in developed and developing countries.

According to BP statistical review 2014, Renewable energy in power generation grew by an above-average 16.3% in 2013. Europe & Eurasia once again contributed the largest growth increment, even though growth in Europe's leading players – Germany, Spain, and Italy – was below average. China contributed the largest national increment. Renewable energy accounted for more than 5% of global electricity production for the first time, and 15% of EU power generation [24]. Renewable energy covers almost 8% of the total energy supplied and biomass covers 43% of the total renewable energy supplied. So the most efficient and economic treatment of the biomass products, is needed for the better use of this energy source. Biomass densification technology fulfills this criterion and that's why, it has become such a popular and well-known technology at present throughout the world. The low-energy density of biomass by volume, in comparison with fossil fuels, results in higher handling, storage and transportation costs. Consequently, biomass is most economically feasible when used close to the source. The cost of biomass transportation is reduced through densification technologies. Densification technologies produce a homogeneous product with a higher energy density than that of the original raw material, at the expense of new capital and operating costs.

4.4. History of Biomass Densification Technology

The compaction of loose combustible materials for fuel making purposes is a technique that has been existence since thousands of years ago. On the other hand industrial method of briquetting seems to be dated back to eighteenth century. In 1865, report was made on machines used for making fuel briquettes from peats and are recognized as the predecessors of the present briquetting machines. Since then, there has been a wide spread use of briquettes made from brown coal and peat etc. The use of organic briquettes (biomass briquettes) started more recently compared to coal briquette. It seems to have been common during world war and during the 1930s depression. The modern mechanical piston briquetting machine was developed in Switzerland based upon German development in the 1930s [25]. Briquetting of saw dust are widespread in many countries in Europe and America during World War ii because of fuel shortages. However, after the World War, briquettes were gradually phased out of the market because of availability and cheapness of hydrocarbon fuels. In Asia, ancient people of Nepal have been using animal dung briquettes for cooking in rural areas. These low-pressure traditional briquettes made from a mix of animal dung and biomass (rice straw, jute sticks etc) were of different shapes, sizes and composition. Though inefficient, the burning of loose biomass created enough heat for cooking purposes and keeping warm. The first commercial biomass briquetting plant in the country, Nepal Bio-Extruder Industry, was established in 1982 in Thapathali, Kathmandu. Its annual production capacity was 900 metric tons of briquettes. It used rice husk as raw material and a pyrolysis technology to create the briquettes. Another factory with an annual production capacity of 1200 tons was established in Butwal in 1984 and a third one with an annual production of 600 tons followed in Dharan in 1984. They used a combination of rice husks and molasses. In Nepal, lot of works has been done to improve the technology by producing biomass briquette from various raw materials [26].

In 1925, Japan independently started developing technology to harness the energy from sawdust briquettes, known as "Ogalite". Between 1964 and 1969, Japan increased production by incorporating screw press and piston press technology. The member enterprise of 830 or more existed in the 1960's. Europe and the United States has pursued

and perfected the reciprocating ram or piston press while Japan has independently developed the screw press technology. Although both technologies have their merits and demerits, it is universally accepted that the screw pressed briquettes are far superior to the ram pressed solid briquettes in terms of their storability and combustibility. The new compaction techniques incorporated in screw press machines made briquettes of higher quality than those in Europe. As a result, European countries bought the licensing agreements and now manufacture Japanese designed machines [27].

4.5. Present State of Biomass Briquette Technology

The technologies available today for large-scale production of densified biomass, specifically wood pelleting and briquetting. Wood pelleting technology is well established through decades of commercial production. Annual global wood pellet production capacity is estimated in excess of 10 million metric tons. Current annual production in the United States and Canada is estimated in excess of 3 million metric tons [28]. The technology is well established and production capacity growth is expected to continue. Extrusion wood briquetting technology is well established, although at a much smaller commercial scale than pelleting. The technology has been in use for decades. Briquetting provides the option of a mobile densification system, which may be taken to the feedstock to be densified for potential transport cost savings. Although not well established on a commercial scale for densification of agricultural residues, both pelleting and extrusion briquetting technologies are considered suitable. Although in-feed systems are not part of this study scope, the feedstock in-feed system should be configured as required for receipt and pre-processing of agricultural residues. These in-feed system adjustments may include, but not be limited to, bale conveyors, bale tub grinders, and hammer mills. Feedstock drying equipment may possibly be eliminated due to the lower moisture content for byproducts. However, covered storage would be required to prevent moisture introduction into the feedstock. Some supplemental drying equipment may or may not be required, depending on feedstock type and handling operations.

We assumed higher throughputs for the presses for the same process when densifying agricultural residue, compared to woody feedstock, based on input from equipment Manufacturers. Increased throughputs for agricultural residues (as compared to woody feedstock) are assumed at 60 percent for pelleting and 20 percent for extrusion briquetting. This increase requires larger handling and storage equipment, such as conveyors, bins, and silos. Biomass densification technology has been adopted throughout the world at present. But this technology varies from country to country depending on the various factors such as economic condition, energy demand, raw materials available etc. The biomass technology available today for large scale production of densified biomass depending on the type of equipment used, are briquetting and pelleting. Densified biomass produced in developing countries is mostly in the form of briquettes, which are used directly to substitute fuel wood or for carbonizing to produce briquetted charcoal; use of pellet so far appears to be insignificant. Extrusion briquetting technology is well established, although at a much smaller commercial scale than pelleting. The technology has been in use for decades.

Two common types of briquetting presses technology employed in developing countries at present are heated-die screw press and piston press. It appears that heated-die screw press technology was invented in Japan in mid-1940s. at present, the technology is being used by most of its neighboring and nearby countries, particularly Korea, China, Taiwan, Vietnam, Thailand, Malaysia, Philippines, Bangladesh, etc. The piston press technology is the dominant technology in India, Brazil and Africa. While these are locally made in India and Brazil, the African machines appear to be mostly imported. Though there are differences in production technology and types of products, this technology is seen almost everywhere in the world. In Asia, the countries such as China, India, Bangladesh, Myanmar, Nepal, Philippines, Thailand has adopted this technology significantly to meet their increasing energy demand. The vast use of this technology is seen in this region due to availability of raw materials, demand for cheap cooking fuel, low production cost etc.

In Africa, there has been an interest in biomass briquetting technology recently. There are large-scale functioning briquetting plants in Ethiopia, Kenya, Malawi, Uganda, Sudan, Zambia and Zimbabwe. Biomass densification technology has found limited application certain other countries such as Cameroon, Eritrea, Ghana, Rwanda, Senegal, Tanzania etc. However this technology in Africa appears to be limited to certain pockets in most countries.

In Latin America, densification technology is best established in Brazil, where it was introduced around 1980. It appears that densification is not common in most other countries of Latin America, although densified biofuels are known in Haiti since 1980.

North America (USA and Canada) and Sweden are the two largest producers of wood pellets at present. In the USA, wood pellet industry became established in mid-1980s. At present, there are about 60 pellet manufacturers in the country based on biomass densification technology. In Germany, the use of densification technology started in the last few years by providing pellet production; it is in early stage at present but interest is growing fast.

4.6. Biomass Densification Technology in Bangladesh

Biomass briquette production technology is used in many districts of Bangladesh especially where the raw materials are available. The history of this technology in Bangladesh is not so old. It is said that, biomass densification technology was introduced in Bangladesh around 1990 by a private entrepreneur. An entrepreneur in Sylhet district imported a briquette machine from Taiwan and set up a factory. Later the technology was adopted into few other places and now it has spread most of the districts of Bangladesh. Generally, the heated die screw press densification technology is used and rice husk is used as raw material for densification in Bangladesh. The detail back ground of introducing the biomass densification technology has been come to know after a discussion between Dr. Ahiduzzaman and Md. Mostafizur Rahman who previously worked in Alec Engineering Workshop in Sylhet for more than ten year. According to Mr. Rahman, disposal of rice husk was a problem before 1990 in Sylhet region. It is noted that

un-parboiled rice is processed in Sylhet region, no husk is needed for parboiling. Therefore, husk production is high in this region. The rice mill owner used to throw the husk into river crossing the Sylhet district town. Day by day the cumulated husk created a big problem such as boat could not play on the river and the fishermen who lived on catching fishes could not catch fish from the river. It was a great problem of their livelihood. Then the fishermen filed a case to the authority against the rice mill owner. Then the local authority had taken care about this inconvenience and rice mill owners also tried to find out the solution of better use of rice husk instead of throwing into river. Once one rice mill owner namely Mr. Hyatullah of Sylhet imported a machine from Taiwan and installed in his rice mill premises and this was the first densification machine introduced in Bangladesh added by Mr. Rahman.

This is the most well-known history about the introduction of biomass densification technology in Bangladesh. There may be differences about the history. But it is found authentic that, this technology has started from Sylhet. Continuously by individual efforts, it has extended to many other districts and come to at present form. Some research has been done on this technology since the beginning. Significant works have been done by Dr. Nowsher Ali Moral, Dr. Ahiduzzaman and many others to improve the production quality and determine socio-economic aspect of biomass briquette in Bangladesh. All these efforts have made it possible to reach this technology at present condition within a short time without proper assistance of the government.

Fig: 4.1: Sylhet Division

4.7. Future Prospect of Biomass Densification Technology

Future Prospect of Biomass Densification Technology will be bright. The amount of raw materials potentially available for densification is huge in developing countries. However, actual briquette production in developing countries is far below the technical potential based on availability of raw materials. The future penetration of briquetting technology in these countries will largely depend on the extent of removal of the barriers to this technology. By eliminating these barriers such as lack of awareness about the technology, lack of stable supply and price of raw materials, operation and maintenance problems, lack of trained technicians, this technology will be applied to the practical field significantly. To get the maximum efficiency from this technology, each country tries to pay their best to remove the various limitations of this technology. Thus it is expected to have a more effective and efficient densification technology in near future to meet the extreme energy crisis. In near future if the use of extrusion briquetting densification will continue, in case of smaller scale than pelleting. There is significant interest in the use of roll press briquetting for biomass densification.Currently there are no commercial installation, only initial promising laboratory test results indicate roll press briquetting of biomass has potential to be a low-cost, low energy, high-capacity densification approach. As with any densification process, reliable control of process variables and feedstock properties is essential to good results. Roll press briquetting is a well Established

technology for the densification of powdery granular materials, such as minerals, food products, detergents, coal, sludge, etc. The basic process is to use a screw feeder to direct materials between two opposing rotating presses. The presses include pockets in order to produce the desired briquette and deliver the required press for densification. With the increased advancement of renewable energy and biomass technology, we assume the above densification technologies will advance the use of agricultural residues. The briquetting industry enjoys support from government agencies in only a few countries, e.g. India. Without active government support and intervention, no significant growth of the biomass briquetting industry is likely to occur in the near future. So the prospect of biomass densification technology in near future largely depends on the proper assistance of the government. The future prospect of biomass densification technology also depends on the mismatch of energy demand and supplied. These differences are increasing day by day due to rapid consumption of major fuels such as petroleum, gas etc. That's why; there is a scarcity of these sources. To compensate this lacking, alternative sources are being given preference at present. But not all the sources are efficient and cost effective. Considering all these factors it can be expected that, markets for products based on densification technology will develop in the future in places where energy crisis will exist and traditional and alternative fuel prices will be increasing rapidly. Prospects of biomass densification appear to be improving as a result of growing concerns regarding climate change. The developed countries, which have committed themselves to reduce greenhouse gas (GHG) emissions according to the Kyoto Protocol, are introducing programs to promote biomass densification technology. Prospects of densified biomass will, no doubt, improve as a result for consumption in both domestic and export markets.

CHAPTER: 5
BRIQUETTE PRODUCTION SYSTEM

5.1. Biomass Briquette

Biomass briquettes are made from agricultural waste and are a replacement for fossil fuels such as oil or coal and can be used to heat boilers in manufacturing plants and also have applications in developing countries. It is artificially made by pressing bulk material without binders into the desired forms. Though, best briquette is produced by screw press machine which has a central hole on it for better combustion but piston press system is very easy. Biomass briquettes are a renewable source of energy and avoid adding fossil carbon to the atmosphere. Biomass briquette must meet the safety, heath, technical, trade and other requirements including provisions relating to the protection of the environment. It is a product of biomass densification technology. Some common properties of biomass briquette are given below:

- Hard and rigid.
- Normally cylindrical shape.
- Brown color.
- Small hole at center for better combustion.
- Outer diameter normally 56 to 60 mm.

5.2. Raw Materials Used in Biomass Briquette Production

Different types of raw materials are used for the production of biomass briquette, throughout the world. The most frequent raw materials are saw dust and rice husk. Some other raw materials, coffee husk, tamarind seeds, tobacco stems, coir pith and spice waste have also been used in India. Sawdust is the supreme raw material in Malaysia, Philippines, Thailand and Korea. On the contrary, rice husk is the only raw material used in Bangladesh, India due to vast production of rice husk annually. Peanut shell and cotton stalk appear to the most important raw materials in Africa. The raw material mostly used in developed countries is sawdust and wood wastes.

Moreover, a lot of new biomass products are being applied to this technology to have a better experience. This process becomes more significant when mixture of different biomass products in different ratio is used. Many countries adopt this process at present to increase efficiency. Different types of binders are used for its production. The binders are: paper, cardboard, dung, corn husk and banana peels. The fillers were: sawdust, coffee husks and charcoal fines.

5.3. Advantages of Biomass Briquette

Biomass briquette is now a notable alternative fuel. By virtue of its lot of physical and fuel properties, it covers a major portion of the renewable energy sources. Some advantages of briquette are given below:

- Higher bulk density than the raw materials. So more energy supplied per unit volume occur.
- Biomass briquette contains less moisture than the other traditional fuel.
- It is easy to store and convenient for transportation.
- Very Cost effective.
- Burning efficiency is better.
- Easy to handle during burning.
- Less smoke production.
- Briquettes often have the image of an E-co friendly fuel.
- Reduces the destruction of forest by replacing the wood.
- Less complex production system.
- Various types of raw materials can be mixed to improve its performance.
- Can be used in boiler in a small scale and room heating in cold region. Provides better use of the biomass raw materials. Has large demand throughout the world. That's why; it is regarded as a profitable business source. So it can be said that, except some limitations, biomass briquette has all the qualities to be a major alternative energy source.

5.4. Biomass Briquette Production System

Biomass densification consists of a set of technologies for the conversion of biomass residues into a convenient fuel. The technology is also known as briquetting or agglomeration. Briquette can be produced in many ways in many countries over the world using electricity or without electricity. It could be categorized into five main types depending on the types of equipment used. These are:

5.4.1 Piston press densification Technique

5.4.2 Screw press densification Technique

5.4.3 Roll press densification Technique

5.4.4 Pelletizing Technique

5.4.5 Low pressure or manual presses Technique

5.4.1. Piston Press Densification Technique

Piston press densification technique are two types such as:

1) the die and punch technique

2) the hydraulic press technique

In the die and punch technique is also known as ram and die technique, biomass is punched into a die by a reciprocating ram with a very high pressure thereby compressing the mass to obtain a compacted product. The standard size of the briquette produced using this machine is 60 mm, diameter. The hydraulic press process consists of first compacting the biomass in the vertical direction and then again in the horizontal direction. The standard briquette weight is 5 kg and its dimensions are: 450 mm x 160 mm x 80 mm. The power required is 37 kW for 1800 kg/h of briquetting [29].

5.4.2 Screw Press Densification Technique

In this process, the biomass is extruded continuously by one or more screws through a taper die which is heated externally to reduce the friction. Here also, due to the application of high pressures, the temperature rises fluidizing the lignin present in the biomass which acts as a binder. The outer surface of the briquettes obtained through this process is carbonized and has a hole in the centre which promotes better combustion. The Standard size of this type of briquette is 60 mm diameter.

5.4.3 Roll Press Densification Technique

In a briquetting roller press, the feedstock falls in between two rollers, rotating in opposite directions and is compacted into pillow-shaped briquettes. Briquetting biomass usually requires a binder. This type of machine is used for briquetting carbonized biomass to produce charcoal briquettes.

5.4.4 Pelletizing Technique

It is closely related to briquetting except that it uses smaller dies so that the smaller products are called pellets. The pelletizer has a number of dies arranged as holes bored on a thick steel disk or ring and the material is forced into the dies by means of two or three rollers.

5.4.5 Manual Presses and Low Pressure Briquetting Technique

Different types of manual presses used for briquetting biomass feed stocks. They are specifically designed for the purpose or adapted from existing implements used for other purposes. The main advantages of low-pressure briquetting are low capital costs, low operating costs and low levels of skill required to operate the technology. Low-pressure techniques are particularly suitable for briquetting green plant waste such as coir or bagasse. The wet material is shaped under low pressure in simple block presses or

extrusion presses. The resulting briquette has a higher density than the original material but still requires drying before it can be used. The dried briquette has little mechanical strength and crumbles easily. The use of a binder is imperative.

5.5. Problem Associated With the Present System

5.5.1. Supply and Quality of Grid Electricity

Due to scarcity of grid electricity and the electricity is not available always. As a result, machine cannot be run properly. Some of the producer reported that the voltage of the grid electricity fluctuates frequently. Machine could not run properly without appropriate voltage. Because the heater cannot produce sufficient heat which leads to stop the machine due to very high friction between die barrel wall and rice husk.

5.5.2. Short Life of Screw

The main element of the densification system is the screw. The vital role of this screw is to convey and compress the raw material into the die barrel. The problem is the rapid worn out of tip of the screw. The nominal life of the screw varied from 6 to 15 hours, depending on the quality of repairing and as well as quality of raw material. The higher dust contained in the raw material causes the rapid worn out of the screw. Some producer claimed that parboiled rice husk is more abrasive than un-parboiled rice husk.

5.5.3 Short Life of Die Heater

Normally the ready-made heater is not available in the market. People collect the rejected heater coil from old ships, and bend and join together 3 or 4 coil in parallel to ensure sufficient capacity to supply heat. Since this is made from old rejected heater coils, it has no quality and guarantee, however, the normal life of the heater widely varied from 1 month to 36 months. Once this type of heater is damaged, people cannot repair it, therefore, now a day people find an alternate way. People make heater manually with 18-gauge micron wire coil coated with burnt clay ring. If this coil is damaged then people can easily repair it.

5.5.4. Short Life of Die Barrel

The die barrel is that where in the densification of loose biomass is occurred. The die barrel is made of cast iron. There is 4 or 5 number of edge inner sides of the barrel which guides the delivery of densified biomass. If the depth of these edges is reduced then it is needed to repair the barrel in a lathe shop. If the barrel once is broken there is no way to repair it, people need to buy a new one. The life of the die barrel varied from 15 day to 4 months.

5.5.5. Main Bearing Problem

Most of the producers claimed that the main bearing is damaged due to the overheating the machine because the hot screw is coupled with the bearing shaft. It is to be replaced every 3 months. The producer reported that the new main bearing is costly, they use old

rejected bearing from bus or truck engine. To change the main bearing the whole machine has to be dismantled and it is time consuming and laborious works.

5.5.6. Health Problems of Operator or Mechanic

Normally, operator works in a dirty and smoky environment. The operator who works in a closed room without proper air circulation faced inhaling problem. The mechanics have to welding and grinding of the screw daily and after a period they faced problem with their eyes. Their eyes seem like full of water and red in colour. The operators do not use proper or no safety measures during the repairing of the screw.

5.6 Cost Share

For my proposed system costs are given below where it is consider mixed briquette samples production. In this case costs are comparatively lower.

Materials Name	Cost per kg (Tk.)	Transportation cost for 40kg(Tk.)	Labor cost (Tk.)	Hourly production(kg.)	Daily production(kg.)	Briquette production cost per kg(Tk.)	Briquette selling price per kg (Tk.)	Profit per day (Tk.)	Pay back period (Days)
Rice Husk	9 7	10	200	8	64	10.38	15	295	17
Saw Dust	7								
Paper pulp	5								
Mustard oil cake	30	10	Due to high raw materials price these 3 materials are not profitable for briquette production.						
Sesame oil cake	30	10							
Nigella seed oil cake	30	10							

Initial set-up cost: 5000 BDT
Monthly profit: 9000 BDT

5.7. Economic Analysis:

From the cost share it is seen that at mixed condition of rice husk, saw dust and paper pulp in this piston press system daily about 64kg dry briquette production is possible. Excluding labor cost, material cost it is possible to profit about BDT 300 in daily basis. In this way in a month it is possible to earn about BDT 9000. Initial setup cost only BDT 5000 and payback period is only about 17 days. So, this earning will be helpful for their livelihood to alleviate poverty. Involving more people it may be minimized the unemployment.

5.8. Comparing Between the Existing System and Proposed System

In the existing/traditional systems requires various machineries, electricity supply, more workers whereas proposed system required two workers only one machine. Traditional system needed huge costing for the machine but proposed system needed only very small amount of money. Existing system require electricity whereas proposed system not require electricity. So, this system can be worked all time.

CHAPTER: 6
EXPERIMENTAL SETUP

6.1. Briquette Making Machine

This is the set-up of briquette making machine. Various components of this set-up are given below. Here mild steel is used as main component. Various operations are done by lathe machine such as cutting, surface finishing. Then drilling done by drill bit with the help of drill machine.

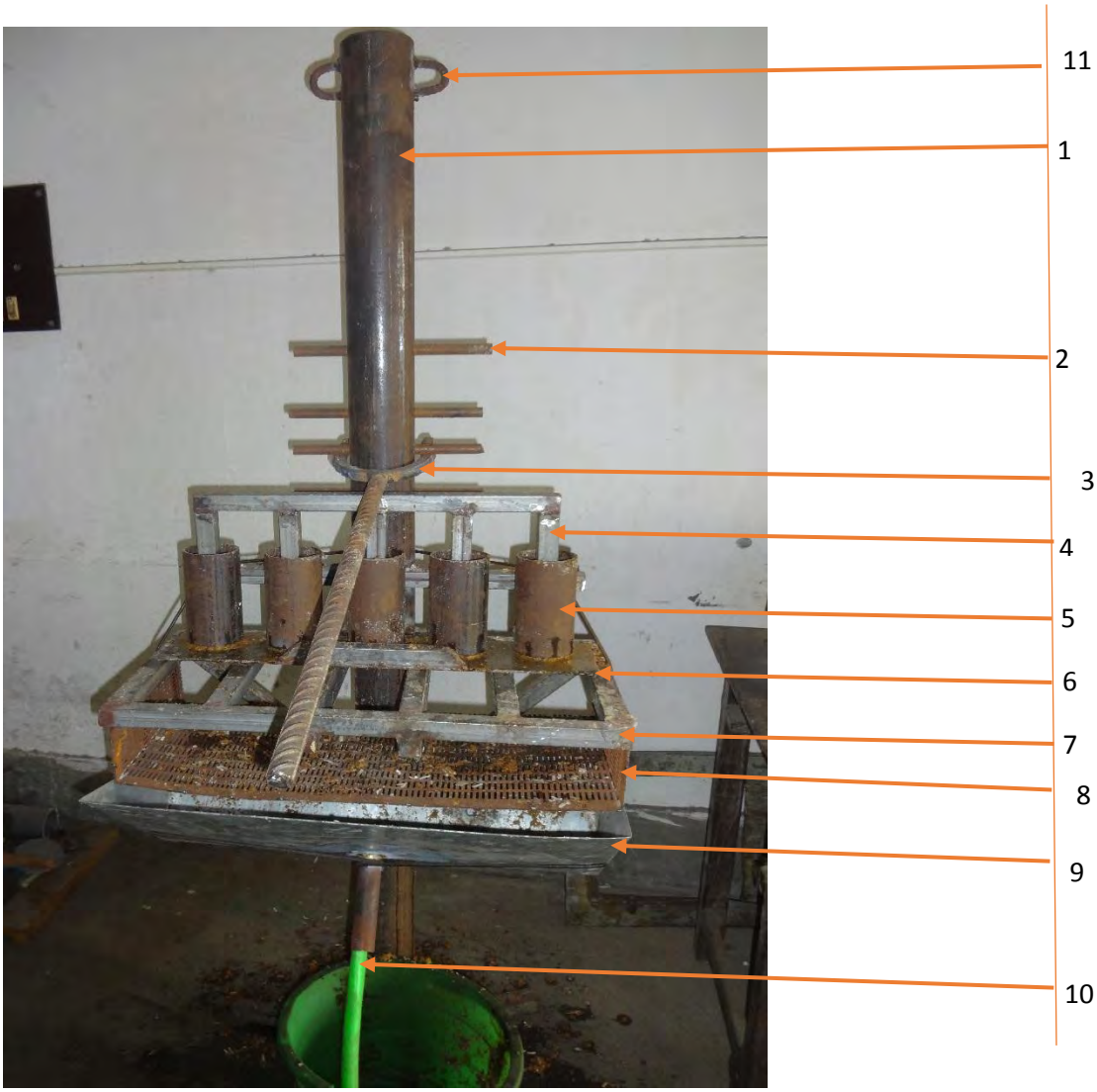

Fig: 6.1: Briquette Making Machine

Square bars and rods are cutting with the help of band saw and disk cutter. Plates are cut by sheet cutter. Then welding and brazing also have done to complete the set up. Number in the right side indicates the components of different parts of the briquette making machine. The name of these parts are given in the next page in 6.1.1.

6.1.1. Components of Briquette Making Machine

1. MS pipe 5.6 feet, Inner Diameter 3.5 inch
2. MS Rod Length 6 inch
3. U shaped Lever 12 inch
4. Piston
5. Cylinder inner diameter 2.5 inch
6. Plate thickness 4mm,Length 21 inch and width 4 inch
7. 1 inch Square bar
8. MS net
9. Tray
10. Water passing pipe
11. Half circular rod

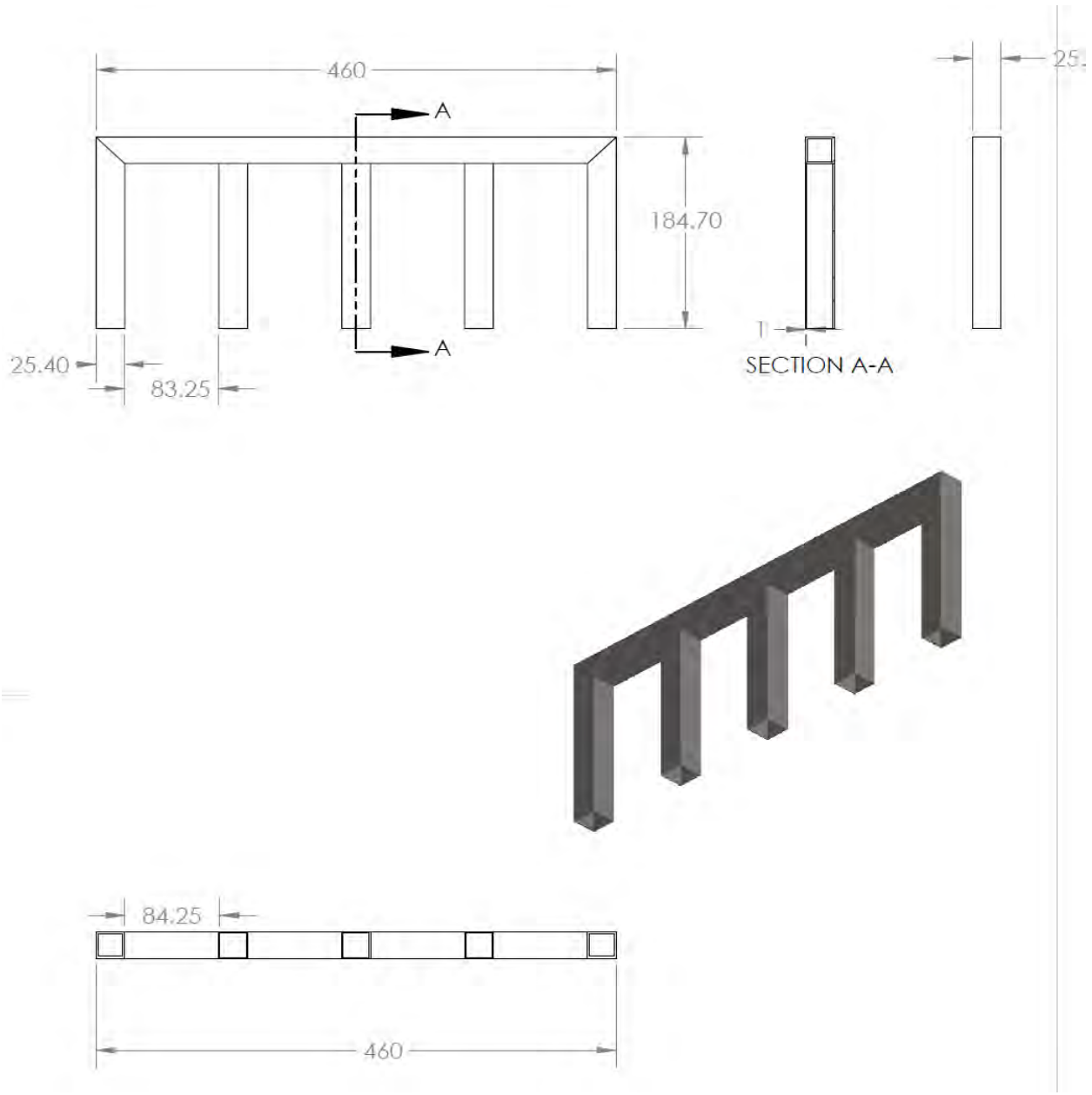

Fig: 6.2: Briquette Making Machine Parts (Dimensions are in Millimeters)

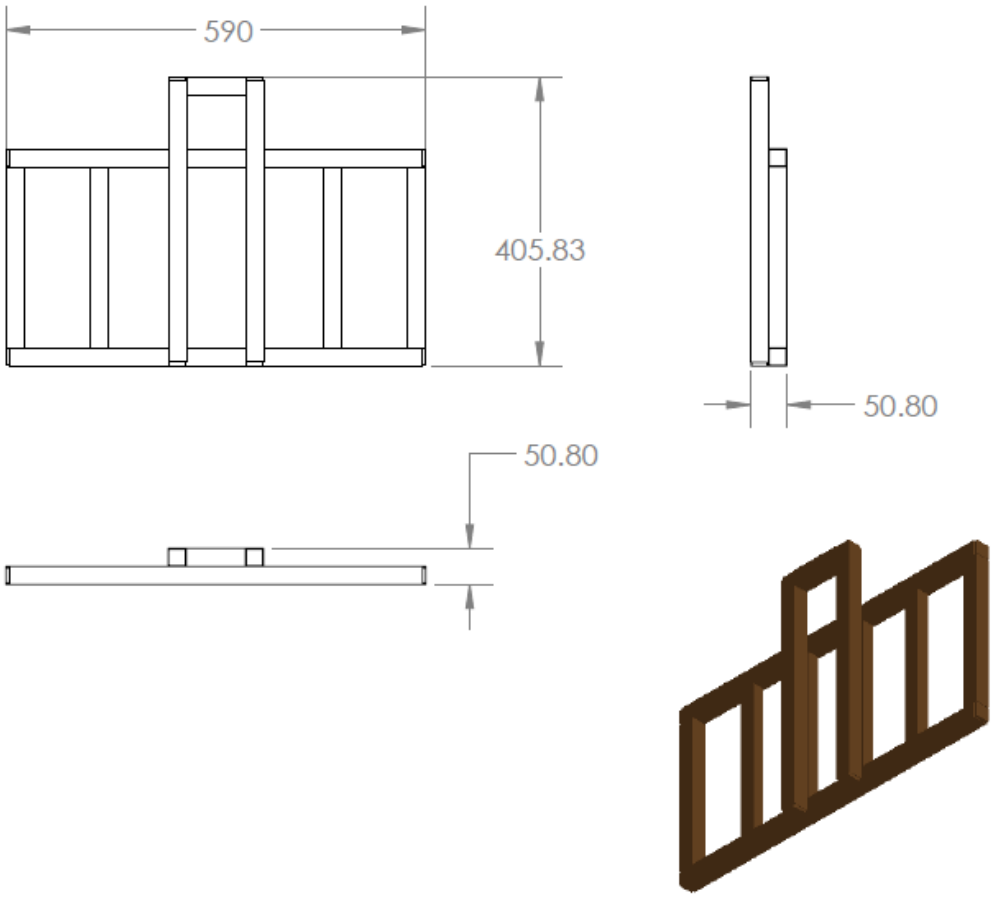

Fig: 6.3: Briquette Making Machine Parts (Dimensions are in Millimeters)

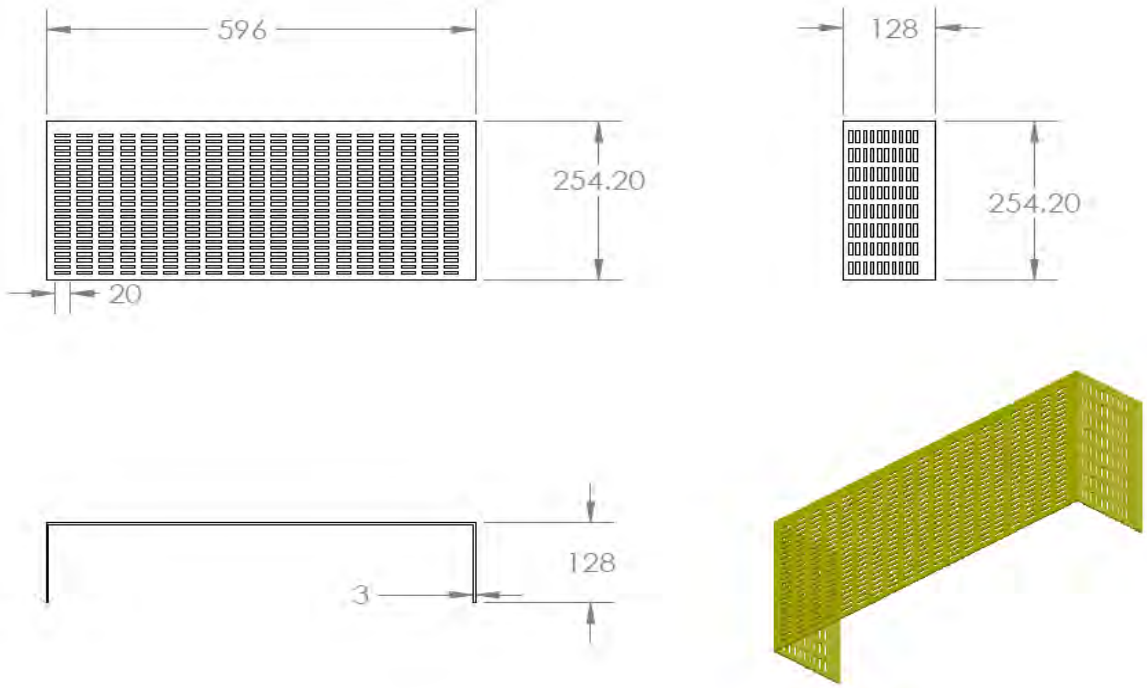

Fig: 6.4: Briquette Making Machine Parts (Dimensions are in Millimeters)

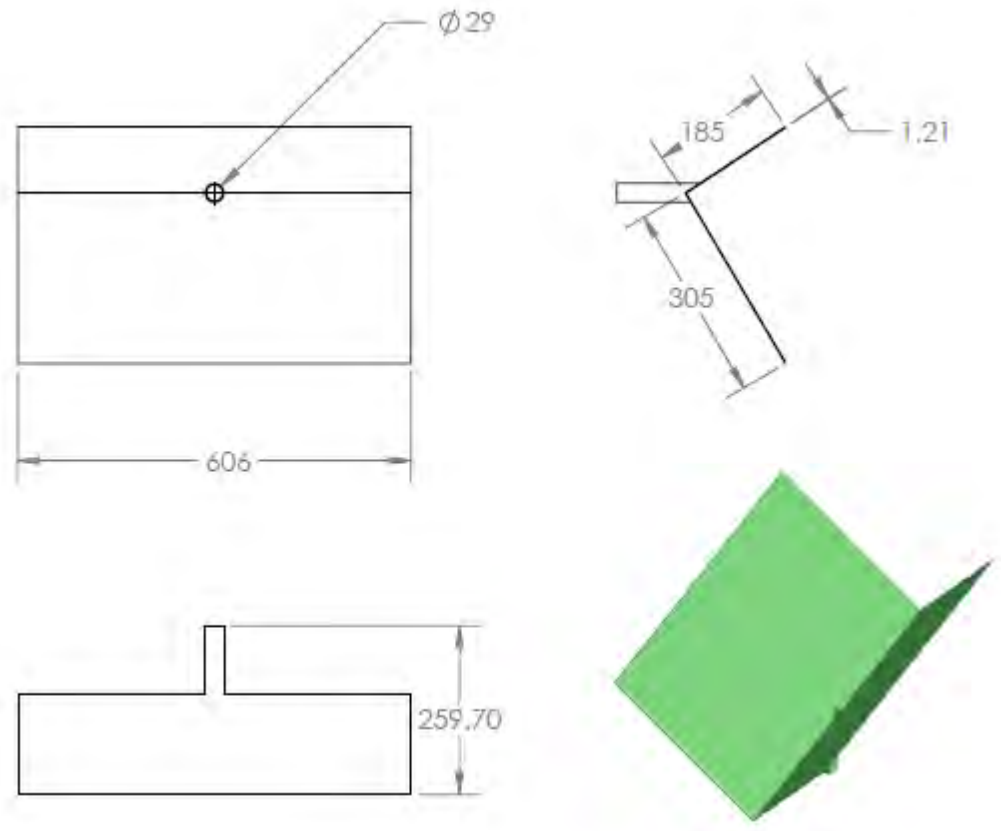

Fig: 6.5: Briquette Making Machine Parts (Dimensions are in Millimeters)

6.2. Solar Drier

Here is a solar drier. It is made by kerosen wood and very thin sheet metal. To make a so lar drier firstly wood and hardboard was cutted by hand saw and leveling by planer. For this purpose table vise, hammer also used. Electrical saw also used for cutting four supporting leg.

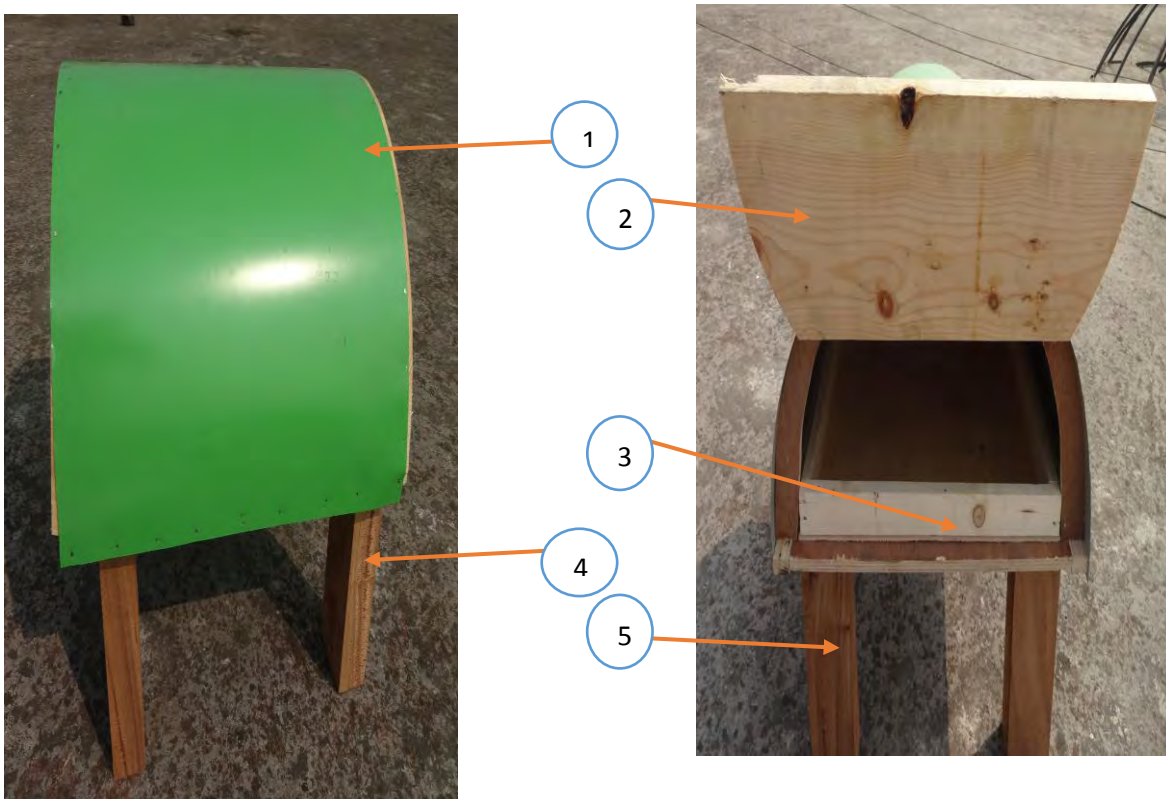

Fig: 6.6: Solar Drier

Firstly, briquette samples were put inside the solar drier then closed the wooden door. In this way kept the samples until fully dried. After fully dried the sample can be stored in the room. The number indicates between two figures are the names of the components that given below in 6.2.1:

6.2.1. Components of Solar Drier Arrangement

1. Thin Sheet Metal
2. Wooden Door
3. Drower
4. Supporting Leg
5. Wooden Block

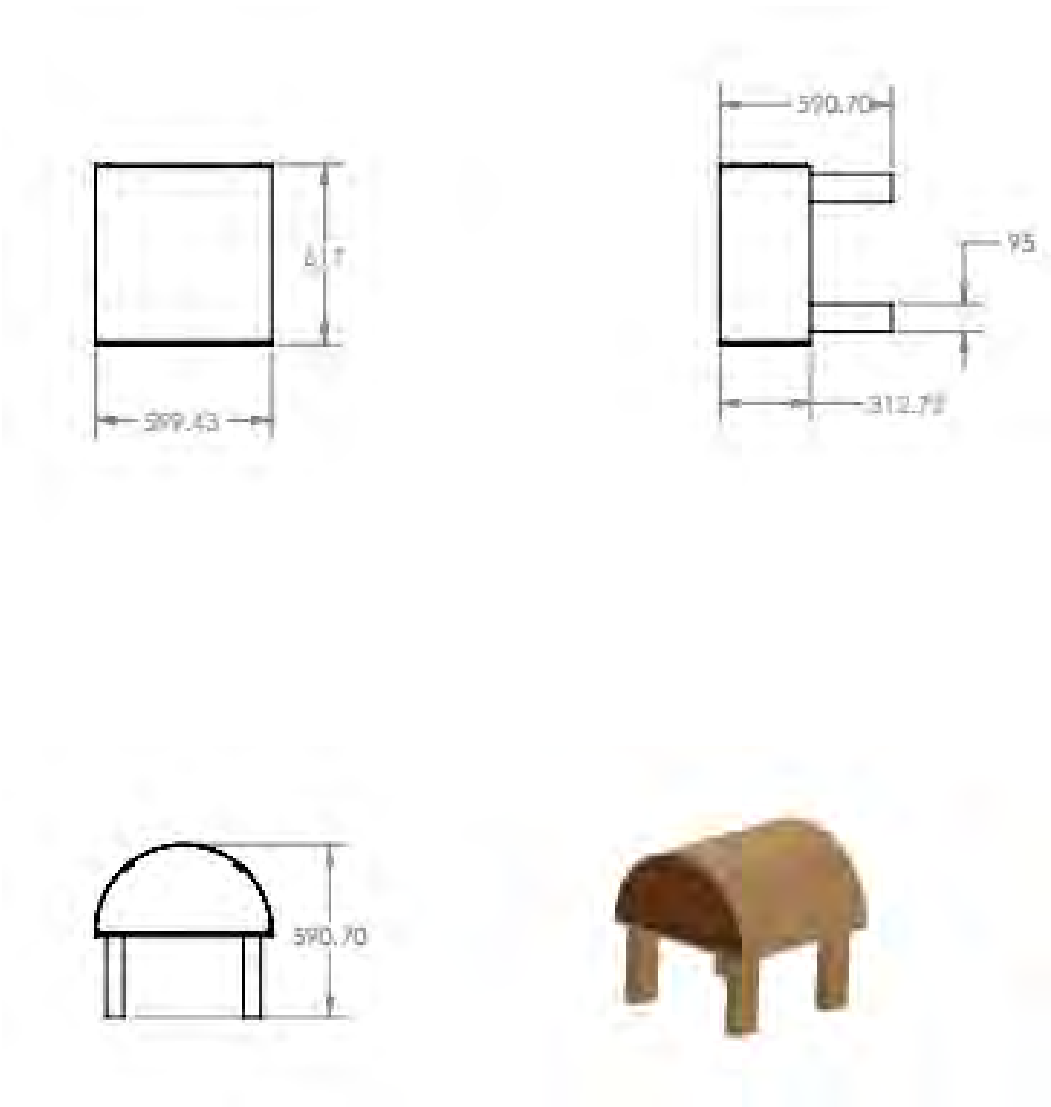

Fig: 6.7: Solar Drier Parts (Dimensions are in Millimeters)

6.3: Load Calculation

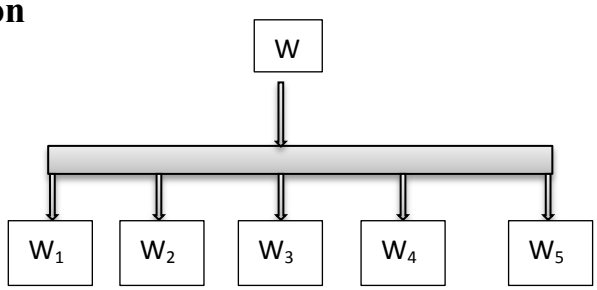

W= $\frac{1}{2}$(Human mass) ✕ Gravitational Acceleration

= $\frac{1}{2}$(60) ✕ 9.8 [Considering mass of a human 60kg and gravitational acceleration 9.8ms^{-2}]

= 294 N

$W = W_1 + W_2 + W_3 + W_4 + W_5$

$W_1 = \frac{w}{5} = 58.8$ N $\quad W_2 = \frac{w}{5} = 58.8$ N

$W_3 = \frac{w}{5} = 58.8$ N

$W_4 = \frac{w}{5} = 58.8$ N

$W_5 = \frac{w}{5} = 58.8$ N

From the above calculation it is seen that total force require to make five briquette is 294 N where as individual briquette require only 58.8 N

6.4: Calculation of Briquette Samples Equivalent weight

Aspect ratio of sample 1=0.88

W_1=162 gm

Aspect ratio of sample 2=0.8

W_2=148 gm

W_1= Equivalent of sample 2 = $\frac{148X0.88}{0.8}$ =162.8 gm

Aspect ratio of sample 3 = 0.88

W_3=166 gm

Aspect ratio of sample 4 =0.8

W_4=152 gm

W_1= Equivalent of sample 4 = $\frac{152X0.88}{0.8}$ = 167.2 gm

Aspect ratio of sample 5 =0.8

W_5=147.5 gm

W_1= Equivalent of sample 5 = $\frac{147.5X0.88}{0.8}$ = 162.25 gm

Aspect ratio of sample 6 =0.796

W_6=147gm

W_1= Equivalent of sample 6 = $\frac{147X0.88}{0.796}$ = 162.51 gm

Aspect ratio of sample 7 =0.84

W_7=160 gm

W_1= Equivalent of sample 7 = $\frac{160X0.88}{0.84}$ = 167.62 gm

Aspect ratio of sample 8 =0.88

W_8=164 gm

Aspect ratio of sample 9 =0.8

W_9=154.2gm

W_1= Equivalent of sample 9 = $\frac{154.2X0.88}{0.8}$ = 169.62 gm

Aspect ratio of sample 10 =0.88

W_{10}=167 gm

Aspect ratio of sample 11 =0.8

W_{11}=154 gm

W_1= Equivalent of sample 11 = $\frac{154X0.88}{0.8}$ =169.4 gm

Aspect ratio of sample 12 =0.8

W_{12}=154.4gm

W_1= Equivalent of sample 12 = $\frac{154.4X0.88}{0.8}$ = 169.84 gm

Aspect ratio of sample 13 = 0.8

W_{13}=152.8gm

W_1= Equivalent of sample 13 = $\frac{152.8X0.88}{0.8}$ = 168.08 gm

Aspect ratio of sample 14 =0.84

W_{14}= 156gm

W_1= Equivalent of sample 14 = $\frac{156X0.88}{0.84}$ = 163.43 gm

CHAPTER: 7
SAMPLE PREPARATION AND EXPERIMENTAL OBSERVATIONS

7.1. Preparation of the Briquette Sample

The briquette samples were produced using manually by hand pressing with five cylindrical molds. Briquettes samples are different compositions of rice husk, with various proportion of saw dust, waste paper, mustard oil cake, sesame oil cake and nigella seed oil cake were produced with addition of specific amount of water as a binder in a bucket. Then mixed properly by using hand and pour the mixer to the five cylinders. After that, keep the piston on the five cylinder and increase the pressure gradually by the lever. Finally, metalic plate removed and given the pressure again slowly. In this way gotten five briquette sampples at a time. Then the collected briquette samples were ready for testing and drying. All the samples proportion and photos are given below:

Sample No. 1:

Rice Husk--------360gm (100%)

Water ------700mL

Diameter: 2.5 inch

Length: 2.2 inch

Aspect Ratio=L/D

=0.88

Weight: 162gm

Fig: 7.1: Sample No.1

Sample No. 2:

Rice Husk--------180gm (50%)

Waste Paper-----108gm (30%)

Mustard oil Cake---- 72gm (20%)

Water ------1L

Diameter: 2.5 inch

Length: 2 inch

Fig: 7.2: Sample No. 2

Aspect Ratio=L/D

=0.8

Weight: 148 gm

Sample No. 3:

Rice Husk--------180gm(50%)

Waste Paper-----108gm(30%)

Sesame oil Cake---- 72gm(20%)

Water ------1L

Diameter: 2.5 inch

Length: 2.2 inch

Aspect Ratio=L/D

=0.88

Weight: 166 gm

Fig: 7.3: Sample No. 3

Sample No. 4:

Rice Husk--------180gm (50%)

Waste Paper-----108gm (30%)

Nigella seed oil Cake---- 72gm (20%)

Water ------1L

Diameter: 2.5 inch

Length: 2 inch

Aspect Ratio=L/D

=0.68

Weight: 152gm

Fig: 7.4: Sample No. 4

Sample No. 5:

Rice Husk--------180gm (50%)

Waste Paper-----144gm (40%)

Mustard oil Cake---- 36gm (10%)

Water ------700mL

Diameter: 2.5 inch

Length: 2

Aspect Ratio=L/D

=0.8

Weight: 147.5gm

Fig: 7.5: Sample No. 5

Sample No. 6:

Rice Husk--------180gm (50%)

Waste Paper-----144gm (40%)

Sesame oil Cake---- 36gm (10%)

Water ------700mL

Diameter: 2.5 inch

Length: 1.99 inch

Aspect Ratio=L/D

=0.796

Weight: 147gm

Fig: 7.6: Sample No. 6

Sample No. 7:

Rice Husk--------180gm (50%)

Waste Paper-----144gm (40%)

Nigella seed oil Cake---- 36gm (10%)

Water ------700mL

Diameter: 2.5 inch

Fig: 7.7: Sample No. 7

Length: 2.1 inch

Aspect Ratio=L/D

=0.84

Weight: 160 gm

Sample No. 8:

Rice Husk--------180gm (50%)

Saw Dust-----108gm (30%)

Waste Paper-----72gm (20%)

Water ------800mL

Diameter: 2.5 inch

Length: 2.2

Aspect Ratio=L/D

=0.88

Weight: 164gm

Fig: 7.8: Sample No. 8

Sample No. 9:

Rice Husk--------180gm(50%)

Saw Dust-----144gm(40%)

Waste Paper-----36gm(10%)

Water ------800mL

Diameter: 2.5 inch

Length: 2 inch

Aspect Ratio=L/D

=0.8

Weight: 154.2gm

Fig: 7.9: Sample No. 9

Sample No. 10:

Rice Husk--------216gm (60%)

Saw Dust-----72gm (20%)

Waste Paper-----72gm (20%)

Water ------700mL

Diameter: 2.5 inch

Length: 2.2 inch

Aspect Ratio=L/D

=0.88

Weight: 167gm

Fig: 7.10: Sample No. 10

Sample No. 11:

Rice Husk--------324gm (90%)

Sesame Oil Cake-----36gm (10%)

Water ------700mL

Diameter: 2.5 inch

Length: 2 inch

Aspect Ratio=L/D

=0.8

Weight: 154gm

Fig: 7.11: Sample No. 11

Sample No. 12:

Rice Husk--------324gm (90%)

Nigella Seed Oil Cake-----36gm (10%)

Water ------700mL

Diameter: 2.5 inch

Length: 2 inch

Aspect Ratio=L/D

=0.8

Weight: 154.4gm

Fig: 7.12: Sample No. 12

Sample No. 13:

Rice Husk--------324gm (90%)

Saw Dust-----36gm (10%)

Water ------700mL

Diameter: 2.5 inch

Length: 2 inch

Aspect Ratio=L/D

=0.8

Weight: 150.4gm

Fig: 7.13: Sample No. 13

Sample No. 14:

Rice Husk--------324gm (90%)

Waste Paper-----36gm (10%)

Water ------700mL

Diameter: 2.5 inch

Length: 2.1 inch

Aspect Ratio=L/D

=0.84

Weight: 156g

Fig: 7.14: Sample No. 14

7.2. Percentage of Moisture Content

The percentage moisture content (PMC) was found according to ASTM D7582 by weighing 5g of the briquette sample (W_1) and oven drying it at 105 to 110°C until the mass of the sample was constant. The change in weight (W_2) after 1hr was then used to determine the sample's PMC using Equation:

$$PMC = \frac{\mathrm{W1} - \mathrm{W2}}{W1} \times 100\%$$

Where, W_1= Initial weight, W_2= Weight after drying

Fig: 7.15: Oven

7.3. Percentage of Volatile Matter

The percentage volatile matter (PVM) was determined according to ASTM D3175-11 by pulverizing 5g of the briquette sample in a crucible and placing it in a furnace. The briquettes were then kept in a furnace at a temperature of 550°C for 10 min and weighed after cooling in a desiccator. The PVM was then calculated using Equation:

$$PVM = \frac{\mathrm{W1} - W2}{W1} \times 100\%$$

Where, W_1 is the weight of the oven-dried sample and W_2 is the weight of the sample after 20 min in the furnace at 550°C.

Fig: 7.16: Carbolite Box Furnace

7.4. Percentage of Ash Content

A Portion of 5g samples were placed according to ASTM E-830 in a furnace at 750^0C for 2hr after which the crucible and its contents were transferred to a desiccator and allowed to cool. The crucible and its content were reweighed and the new weight noted. The percentage of ash content was calculated thus:

$$PAC = \frac{W1 - W2}{W1} \times 100\%$$

W_1 = Original weight of dry sample, W_2 = Weight of ash after cooling.

7.5. Percentage of Fixed carbon Content

The percentage of fixed carbon was determined according to the following formula

FC (%) = 100 – (%VM + %AC + %MC)

Where VM = Volatile matter, AC = Ash content, MC = Moisture content.

7.6. Calorific Value

The calorific value (heat of combustion) of a sample may be broadly defined as the number of heat units liberated by a unit mass of a sample when burned with oxygen in an enclosure of constant volume. In this reaction the sample and the oxygen are initially at the same temperature and the products of combustion are cooled to within a few degrees of the initial temperature; also the water vapor formed by the combustion is condensed to the liquid state. A more exact definition would specify the temperature at which the reaction begins and ends. However, the change in the heat of combustion with possible variations in the initial temperature is so small. Also, the initial and final temperatures are not the same – differing by the amount of temperature rise in the calorimeter – but the effect of this difference is small and usually it is neglected. Thus the term calorific value (or heat of combustion) as measured in a bomb calorimeter According to ASTM D5865 that the heat liberated by the combustion of all carbon and hydrogen with oxygen to form carbon dioxide and water, including the heat liberated by the oxidation of other elements such as sulfur which may be present in the sample.1gm sample were taken after meshing no. 60 and taking 2 liters distil water, different reading taken during the experiment. Then using calorific value testing equation different values for different sample are founded. All the samples calorific values are more than the rice husk briquette value of 3500 kcal/kg. So, it is seen that using additives with rice husk briquette increases the calorific value.

Fig: 7.17: Oxygen Bomb Calorimeter Arrangement

7.7: Observation of Weight Decreasing

Firstly, solar drier was kept on the roof of EME building. Then some briquette samples are kept inside the drier and close the door of the drier and kept until dried. From the temperature measuring device it can be seen that the inside temperature was 3^0C higher than outside of the solar drier. Every 24 hours after weight of briquette samples were taken for five days. From this test it can be found out how the weight gradually decreased by using solar drier.

Fig: 7.18: Solar Drier for Observation of Weight Decreasing

CHAPTER: 8
RESULTS AND DISCUSSION

8.1. Results

8.1.1. Effect on Density of Different Samples

The main components of briquettes sample are rice husk, saw dust, waste paper, mustard oil cake, sesame oil cake and nigella seed oil cake of different proportion. From the practical observation it is seen that the density is increased when the proportion of rice husk decreased with adding different additives with different proportion.

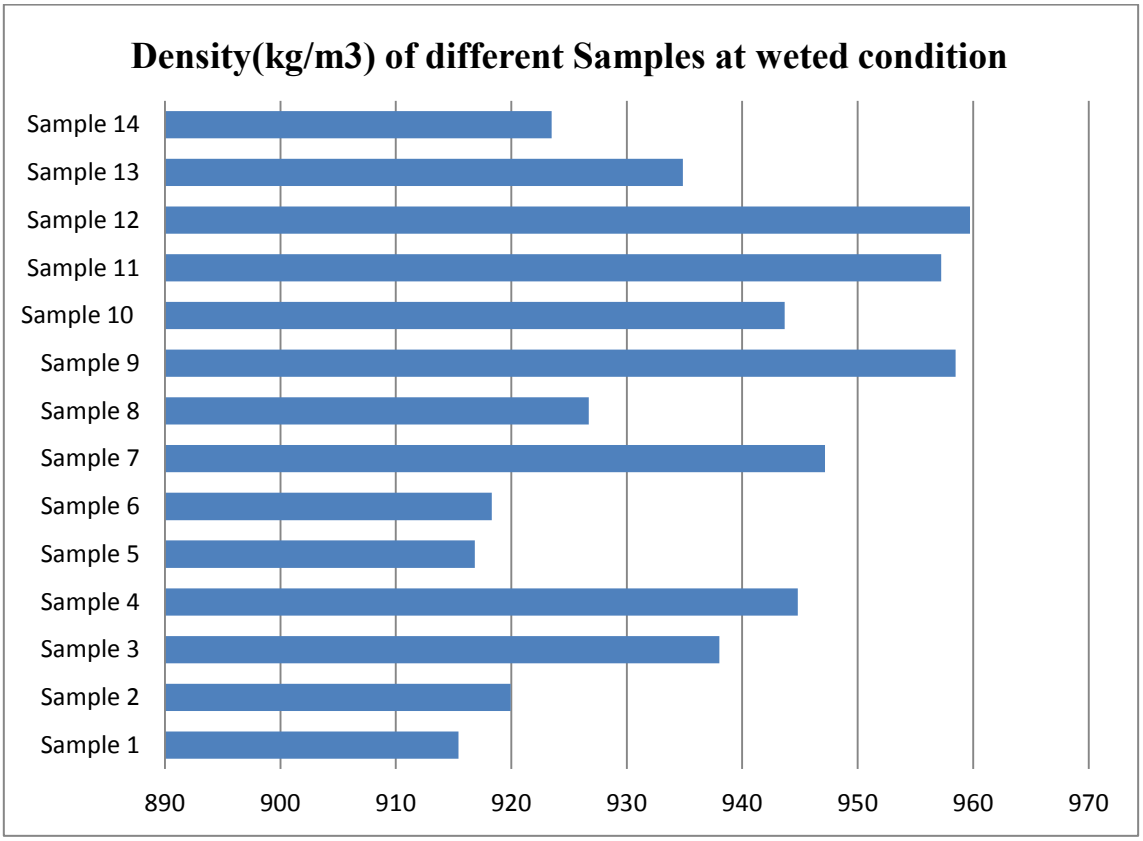

Fig: 8.1: Comparison of Density of Different Samples

From the above bar chart it can be seen that the density of different sample changed when adding different materials in different proportion. For the sample no. 1 the density is 915.4197 kg/m^3 whereas highest density found for the sample no. 12 and its density is 959.7215 kg/m^3 among all the samples. It is mentioned that sample no. 1 contain 100% rice husk (360gm), whereas sample no. 12 contain 90% rice husk and 10% nigella seed oil cake. Other samples density also increases. So, it is found that adding some additives with rice husk plays a role to increase density of briquette.

8.1.2. Effect on Calorific Value of Different Samples

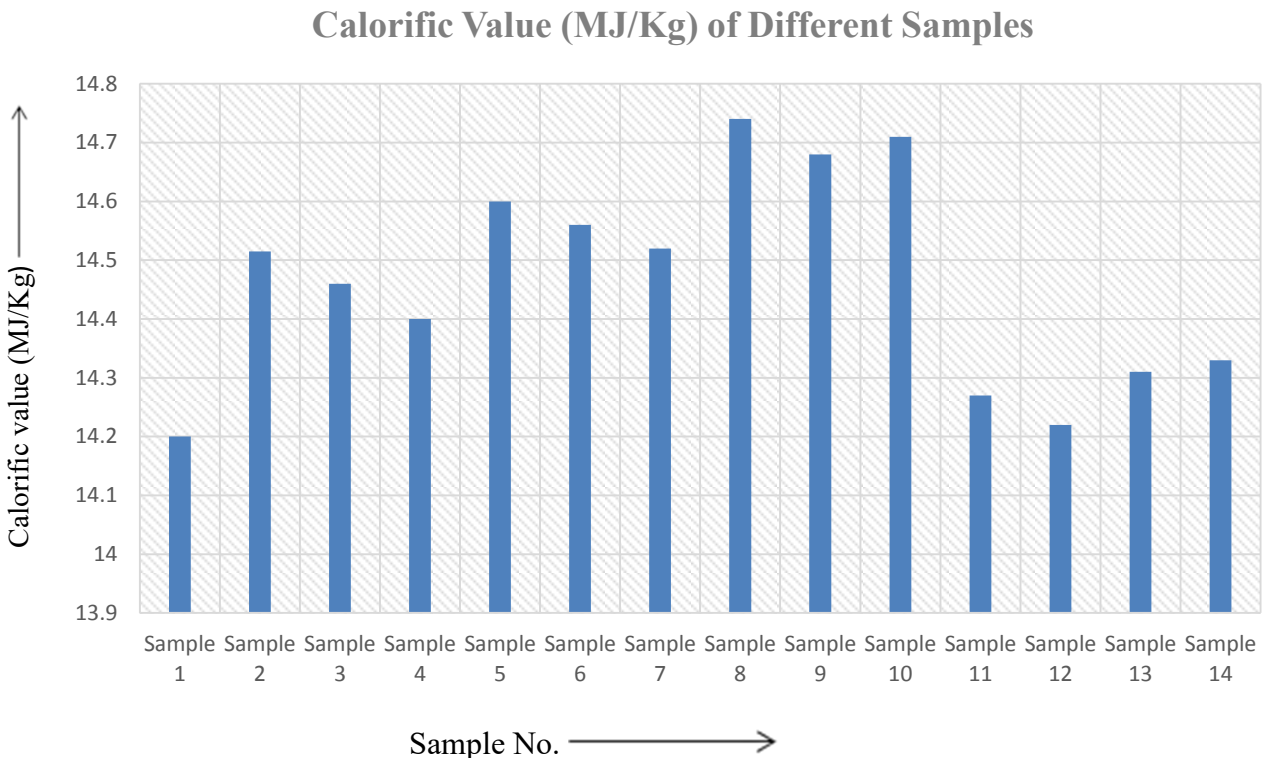

Fig: 8.2: Comparison Calorific Value of different Samples

From the above bar chart it can be seen that the calorific value of different sample changed when adding different materials in different proportion with rice husk. For the sample no. 1 the calorific value is 14.2MJ/Kg which is lowest among all the samples whereas highest calorific value found for the sample no. 8 is 14.74MJ/Kg and the second highest calorific value for the sample no. 10 is 14.71MJ/Kg among all the samples. It is mentioned that sample no. 1 contain 100% rice husk, whereas sample no. 8 contains 50% rice husk, 20% waste paper and 30% saw dust and sample no. 10 contain 60% rice husk, 20% waste paper and 20% saw dust. Other samples calorific value also increases. So, it is found that adding some additives with rice husk plays a role to increase the calorific value of different briquette samples.

8.1.3. Effect on Percentage of Moisture Content of Different Samples

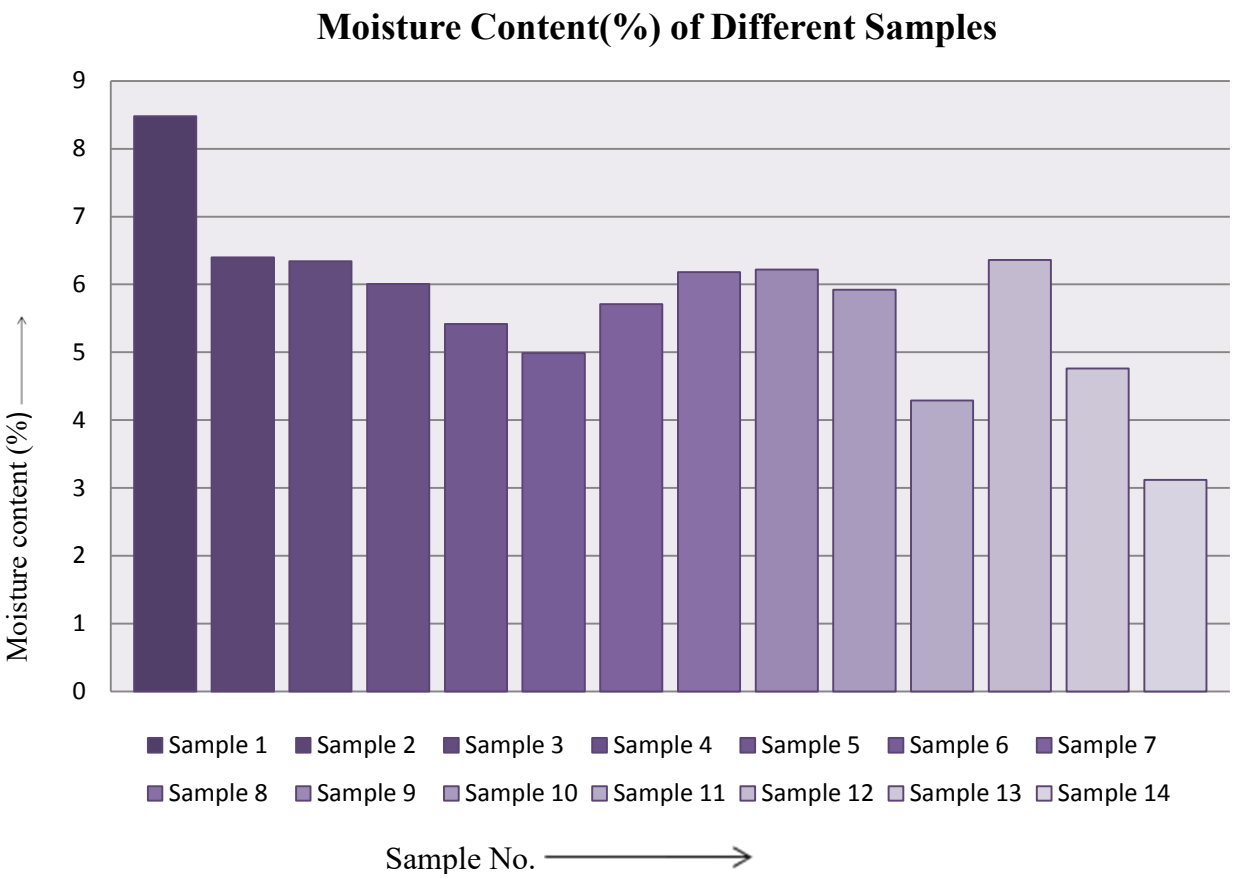

Fig: 8.3: Moisture Content (%) of Different Samples

From the above bar chart it can be seen that the percentage of moisture content of different samples has changed when adding different materials in different proportion with rice husk. For the sample no. 1 the percentage of moisture is 8.48% which is highest among all the samples whereas lowest percentage of moisture content found for the sample no. 14 is 3.12% among all the samples. It is mentioned that sample no. 1 contain 100% rice husk, whereas sample no. 14 contains 90% rice husk and 10% waste paper. Other samples percentage of moisture content also decreases. So, it can be said that adding some additives with rice husk plays a role to decrease the percentage of moisture content of different briquette samples.

8.1.4. Effect on Percentage of Volatile Matter of Different Samples

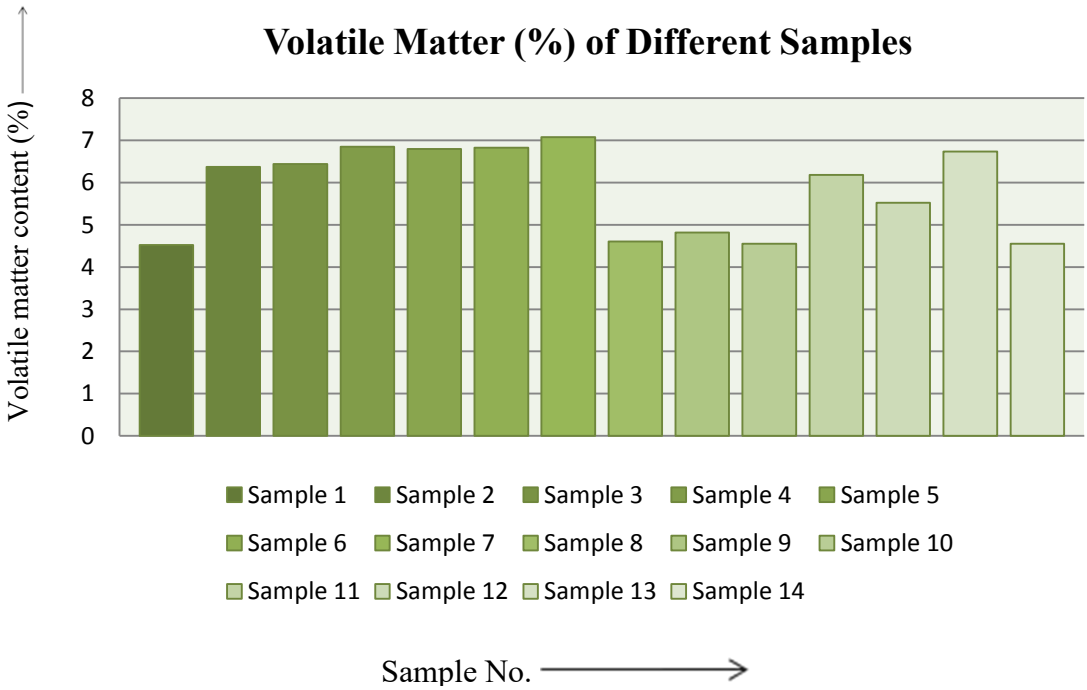

Fig: 8.4: Volatile Matter (%) of Different Samples

From the above bar chart it can be seen that the percentage of volatile matter of different samples has changed when adding different materials in different proportion with rice husk. For the sample no. 1 the percentage of volatile matter is 4.52% which is lowest among all the samples whereas highest percentage of volatile matter found for the sample no. 7 is 7.076% among all the samples. It is mentioned that sample no. 1 contain 100% rice husk, whereas sample no. 7 contains 50% rice husk(180gm), 40% waste paper(144gm) and 10% nigella seed oil cake(36gm). Other samples percentage of volatile matter also increases. So, it can be seen that adding some additives with rice husk plays a role to increase the percentage of volatile matter of different briquette samples.

8.1.5. Effect on Percentage of Ash Content of Different Samples

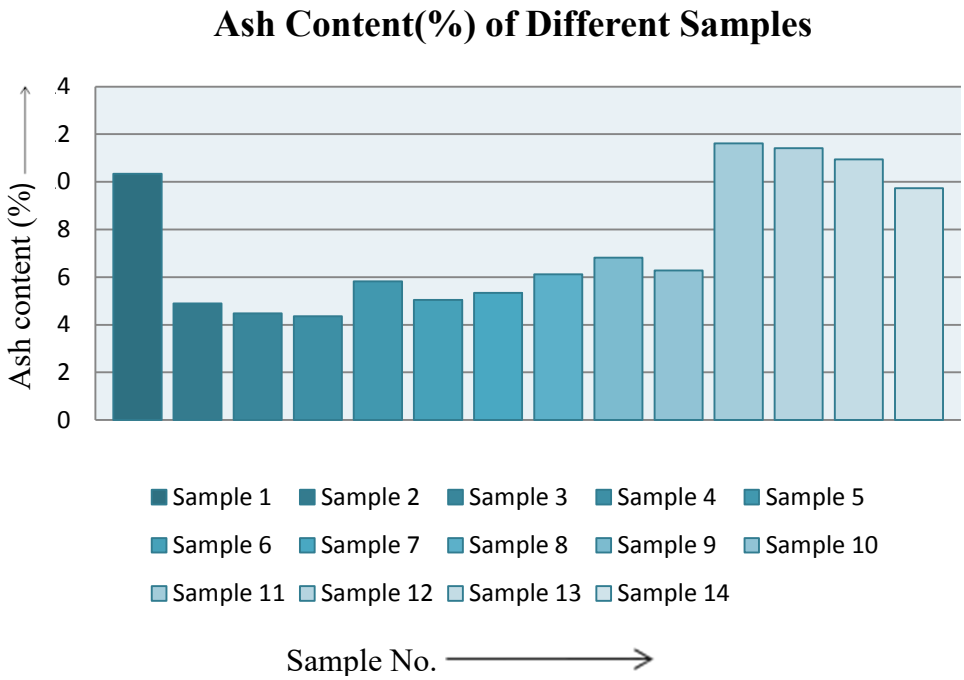

Fig: 8.5: Ash Content (%) of Different Samples

From the above bar chart it can be seen that the percentage of ash content of different sample has changed when adding different materials in different proportion with rice husk. For the sample no. 1 the percentage of ash content is 10.34% which is highest among all the samples whereas lowest percentage of ash content found for the sample no. 4 is 4.36% among all the samples. It is mentioned that sample no. 1 contain 100% rice husk(360gm), whereas sample no. 4 contains 50% rice husk(180gm), 30% waste paper(108gm) and 20% nigella seed oil cake(72gm). So, it can be said that adding some additives with rice husk plays a role to decrease the percentage of ash content of different briquette samples.

8.1.6. Effect on Percentage of Fixed Carbon Content of Different Samples

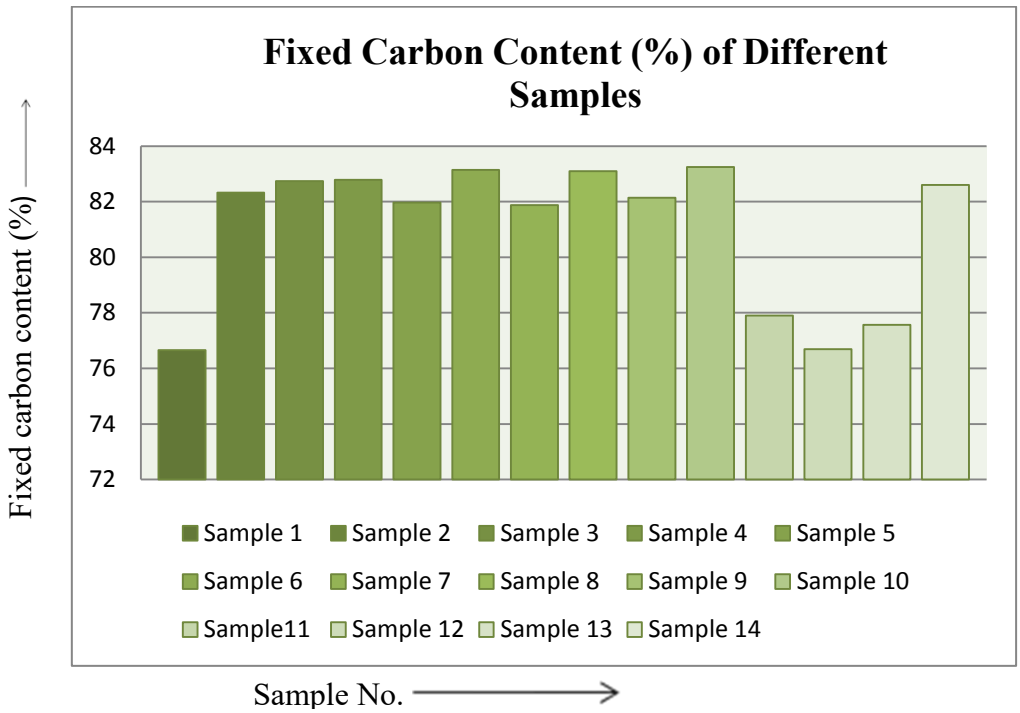

Fig: 8.6: Fixed Carbon Content (%) of Different Samples

From the above bar chart it can be seen that the percentage of fixed carbon content of different sample has changed when adding different materials in different proportion with rice husk. For the sample no. 1 the percentage of fixed carbon content is 76.66% which is lowest among all the samples whereas highest percentage of fixed carbon content found for the sample no. 10 is 83.25% among all the samples. It is mentioned that sample no. 1 contain 100% rice husk (360gm), whereas sample no. 10 contains 60% rice husk(216gm), 20% rice husk(72gm) and 20% waste paper(72gm). Other sample percentage of fixed carbon content also increases. So, it can be said that adding some additives with rice husk plays a role to increase the percentage of fixed carbon content of different briquette samples.

8.1.7. Effect on Aspect Ratio

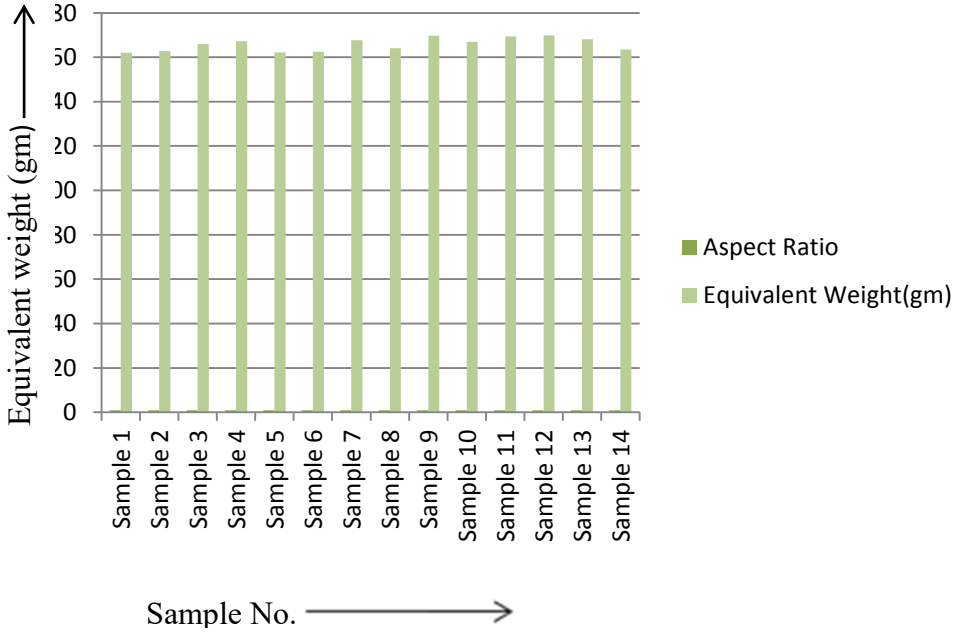

Fig: 8.7: Aspect Ratio vs Equivalent weight of Different Samples

From the above line chart it can be seen that the aspect ratio (L/D) is considering always 0.88 and taking equivalent weight of the samples. From this line chart it is found that highest equivalent weight is 169.84gm for the sample no. 12 but its actual weight is 154.4gm which is lower than its equivalent weight. However, lower equivalent found for the sample no.1 and its actual weight is 162gm.

8.1.8. Effect on Water Quantity

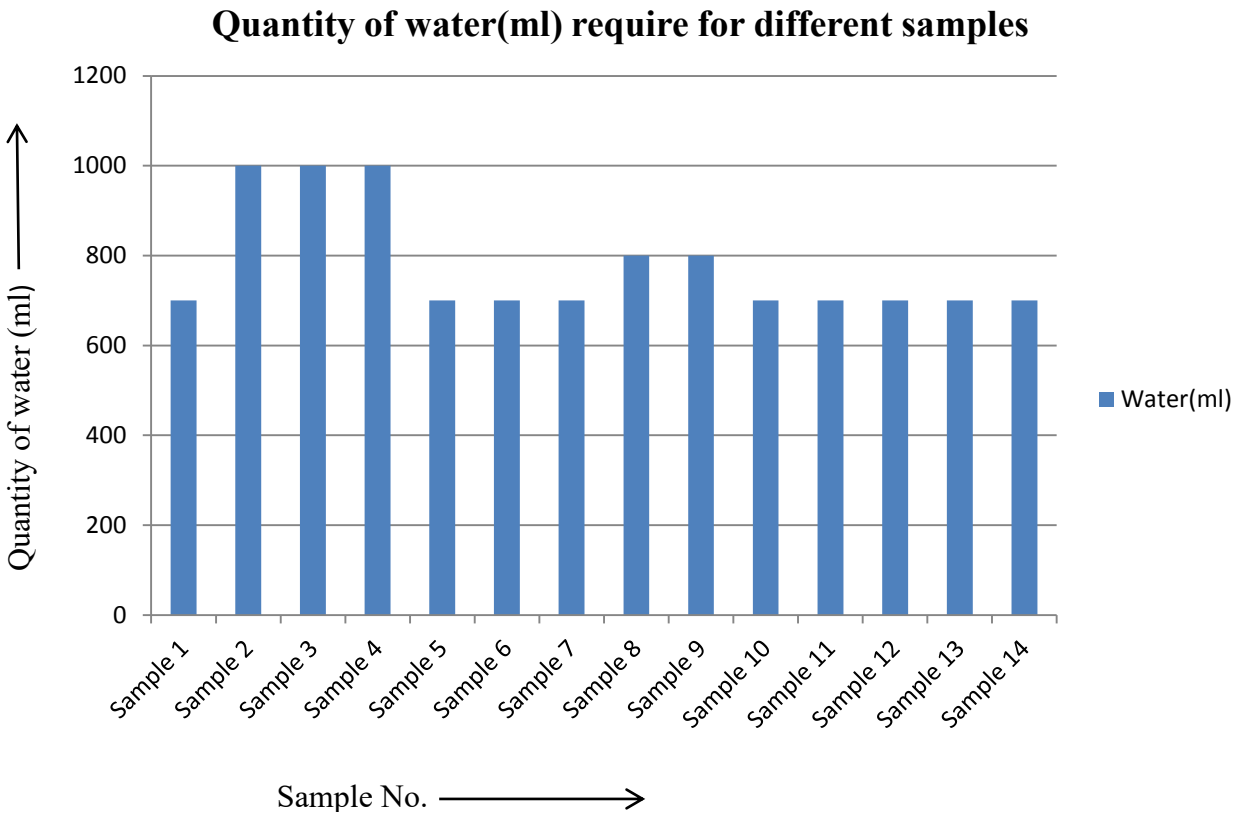

Fig: 8.8: Quantity of Water requires for Different Samples

From the above line chart it can be seen that the maximum quantity of water requires for the sample no. 2, sample no.3 and sample no. 4. In these three samples each requires 1000ml of water. Here for the sample no. 8 and sample no. 9 it requires 800ml each. Except mentioned samples all other require each 700ml of water.

8.1.9. Effect of Solar Drier for Different Samples

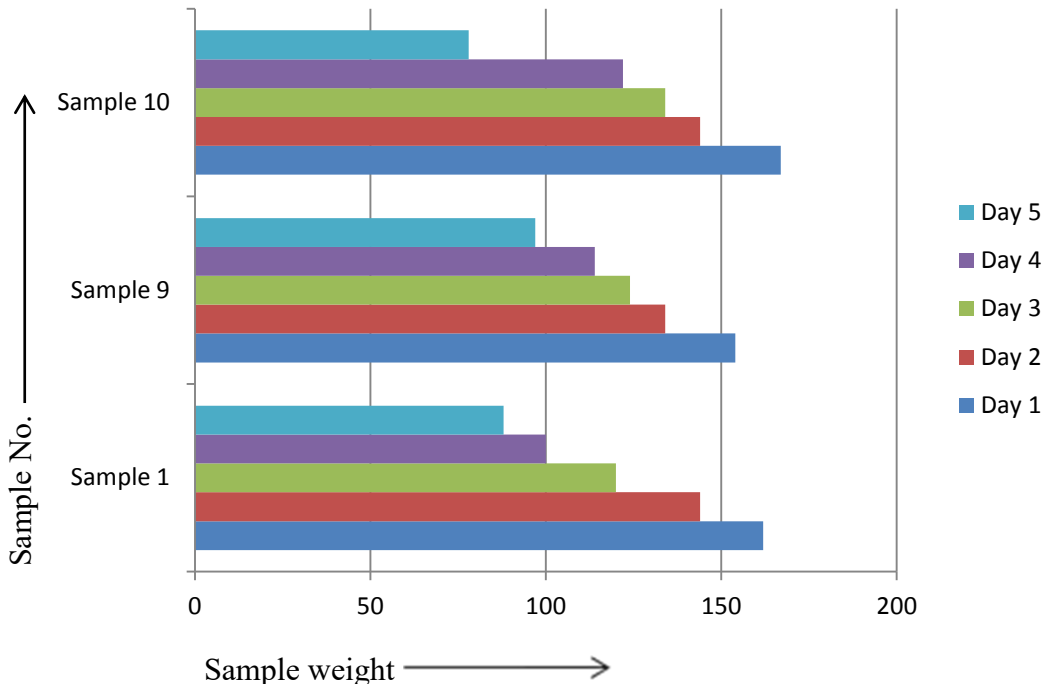

Fig: 8.9: Weight Decreasing (gm) of Different Samples by using Solar Drier

From the above bar chart it can be seen that the mass of samples decreased when the samples dried by using solar drier. Among the samples taken only three samples and kept inside the solar drier for observation of decreasing mass of samples for five days consecutive one day after one day. Everyday mass was taken in 12pm by weight measuring device and noted the mass of the samples. At that time also measured solar drier inside and outside temperature by two ways temperature measuring device and always found that solar drier inside temperature is higher than outside temperature. Initial weight for the samples 1, sample 9 & sample 10 respectively 162gm, 154gm & 167gm. After completion of five days the final weight of the sample 1, sample 9 & sample 10 respectively 88gm, 97gm & 78gm. So, it can be seen that sample 10 decreases in weight much than other two samples.

8.1.10. Wet Samples and Dry Samples Weight Comparison

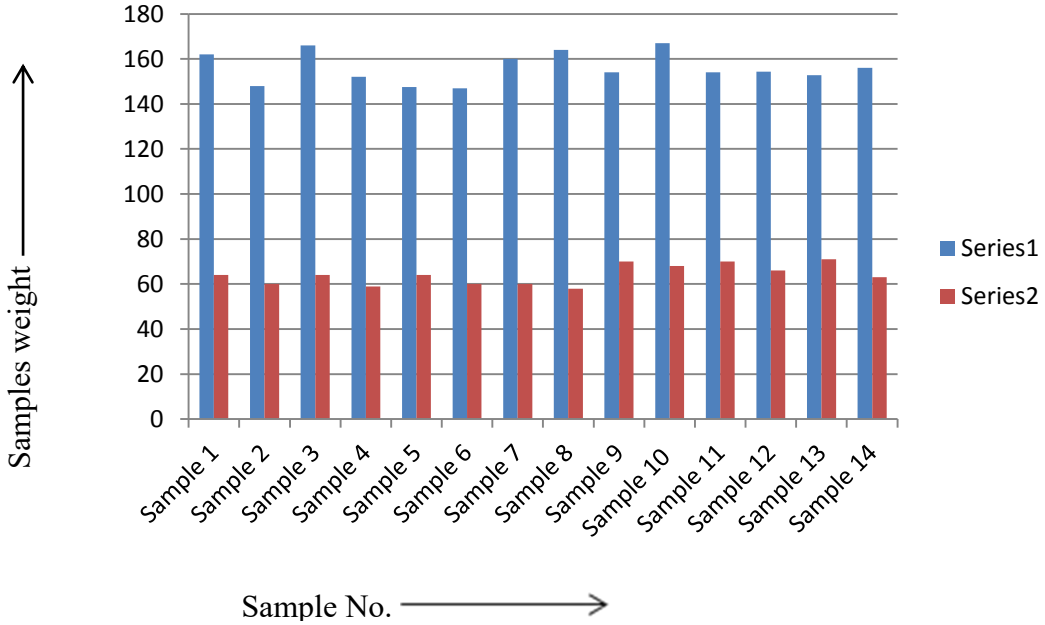

Fig: 8.10: Wet Samples vs Dry Samples Weight Comparison

From the above line chart it is seen that highest briquette sample weight is 167gm for the sample no. 12 among all the briquette samples and its dry weight is 68gm.Whereas lowest briquette sample wet weight is 148gm which is sample no.2. This briquette sample dry weight is 60gm. In average wet briquette sample weight is 156.05gm and average briquette sample dry weight is 64.07gm.

8.2: Comparing Between Rice Husk Briquette Sample and Rice Husk Mixed With Other Raw Materials Briquette Samples

Items	**Rice husk briquette Sample**	**Briquette Samples (Rice husk mixed with other Raw materials)**
Calorific value	Lower	Higher
Density	Lower	Higher
Moisture Content	Higher	Lower
Ash Content	Higher	Lower
Volatile Matter	Lower	Higher
Fixed Carbon	Lower	Higher
Cost	Higher	Lower

8.3: Effect on Economy, Health and Environment

In this system initial capital require very little amount comparing existing system. So, the people of very low income or poor can be setup this machine and start business. By operating this machine they can earn money, reducing poverty and unemployment. This is beneficial for our society as well as our economy growth. Existing system creates many problems on human health such as headache, eye problems of workers but this system is free from these problems. This system is soundless, odor less which is environmentally very good.

8.4.Discussion

From the test of different briquette sample it has found that the density, calorific value, moisture content, percentage of volatile matter, percentage of fixed carbon content changed due to addition of different type of additives mixed with rice husk. It has seen that density of briquette samples increases about 4.83% after mixing of additives than only rice husk briquette sample. In the same way calorific value of the briquette sample mixed with rice husk increases about 3.80% than only rice husk briquette. The percentage of moisture content for the rice husk briquette is 63.20% higher than mixed additives briquette samples. The percentage of volatile matter for the rice husk briquette is 56.54% lower than rice husk briquette mixed with additives. The percentage of ash content decreases 57.83% when mixed additives with rice husk than only rice husk briquette. The percentage of fixed carbon content increases 8.59% when mixed additives with rice husk than only rice husk briquette.

CHAPTER: 9
CONCLUSION

The Biomass briquetting technology has enormous potential for an agricultural country over the world like Bangladesh. As a result gradual popularity increased rapidly. The goal of this research was to find out an easy technique for making briquette without use of electricity and how can be improving calorific value of rice husk briquette using different materials in various proportions. Here the quantity of rice husk not less than 50% mixing with other additives such as saw dust, paper pulp, mustard oil cake, nigella seed oil cake. Uses water as a binding agent in this type of mixing. These briquette samples are produced with mixing varying proportions of these four types of raw materials with each other. The quality of the briquette samples are influence by the percentage of different raw materials used. Observation carried out to examine the effects of properties of briquette samples which are produced from different composition of rice husk. From the experiment of different samples it was found that physical and fuel properties were increased for the mixed rice husk samples than only rice husk sample. Its production cost is cheap and the expansion from profit gain. So, more and more people can be attracted to the briquette business raising with less investment but gaining income easily.

Still there is a scope for development in this sector by researching for more effective ways to make briquette sample.

CHAPTER: 10
OBSERVATIONS & RECOMMENDATION

10.1. Observations

Several problems were faced at the time of making different briquettes sample and these are given below:

- The availability of raw materials in Dhaka city is scarce and it takes long time to collect the raw materials.
- Machine is not used to provide pressure to the raw material. Briquettes sample are produced by simple hand operation and it creates some problem in hand after continuous operation.
- Some materials fallen down during pouring it to the cylinders.
- Sometimes the edge of the briquettes broken in the time of removal from the cylinders.
- Wet briquettes take much time to dry off.
- There is no internal hollow in the briquettes that are produced which will might be decreased its burning efficiency.
- Wet paper which acts as a binder takes long time to make them usable.
- Rats are also causes problem by breaking the samples in the laboratory.
- It takes at least 45 minute for each sample.
- Misfiring happens frequently and it kills much time.

10.2. Future Recommendation

- The maximum effectiveness or the increase of popularity among the people is affected by the role of government or the donor agencies. So their significant concentration is required to establish the new production system.
- In Bangladesh, biomass briquette mainly covers the demand for cooking purposes. Its efficiency can be increased by various modifications. Specially designed burning device is being used in several countries for briquette. So by introducing this device in Bangladesh, the efficiency of the briquette will increase much more than the present thus it will completely replace the fuel wood.
- The deforestation rate is being increased in Bangladesh and it increases the pollution. If wood can be completely replaced by biomass briquette, then it will reduce the deforestation rate and environment pollution and thus offers a comparatively greener environment. For this, awareness should be created among the users to use the briquette which is more effective than fire wood.
- This system can be modified by setting up the piston press system both sides of the pipe.
- Different materials are various proportions can be mixed for their better performance.
- The biomass densification technology has come to this form after a lot of modification. It will need more works to be done on it to increase its efficiency, to meet the increasing demand and to compete with future modern technology. So, by spreading this technology throughout the country, it can be expected to come more people for working on it to provide an effective and popular densification technology in the country.

REFERENCES:

[1] Alam, M.M, Islam, H., Hasan, M.M. and Siddique, T.A., "A Study of Biomass Densified Fuel(Briquette) in Bangladesh". Proceedings of the International Conference on Mechanical Engineering and Renewable Energy 2011(ICMERE2011) 22- 24 December 2011, Chittagong, Bangladesh

[2] Bhattacharya, S.C., "Biomass Energy and Densification: A Global Review", Invited paper, First World Pellets Conference, 2-7 September, 2002, Stockholm, Sweden.

[3] Kurchania, A.K., "Biomass Energy". Renewable Energy Sources Department, College of Technology and Engineering, India.DOI: 10.1007/978-3-642-28418-2_2, Springer-Verlag Berlin Heidelberg 2012.

[4] Maninder, Kathuria R.S., Grover S., "Using Agricultural Residues as a Biomass Briquetting: An Alternative Source of Energy", IOSR Journal of Electrical and Electronics Engineering (IOSRJEEE) 1676 Volume 1, Issue 5 (July-Aug. 2012), PP 11-15.

[5] Bhattacharya, S.C., Leon M.A., and Rahman, M.M., "A Study on Improved Biomass Briquetting", "Reprinted from Energy for Sustainable Development" The Journal of the International Energy Initiative, Vol. VI, No 2, pp. 67-71, June 2002.

[6] Nasir NF, Daud WRW, Kamarudin SK, Yaakob Z., "Process system engineering in biodiesel production:" a review. Renew Sustainable Energy Rev 2013;22:631-9

[7] Bhattacharya SC, Arul JoeM, Kandhekar Z, Abdul Salam P, Shrestha RM. "Greenhouse-gas emission mitigation from the use of agricultural residues: the case of rice husk". Energy1999;24(1):43–59.

[8] Demirbas A., "Biomass resource facilities and biomass conversion processing for fuels and chemicals". Energy Convers Manage 2001; 42:1357–78.

[9] Susta MiroR, Luby P, Mat SB., "Biomass energy utilization and environment Protection commercial reality and outlook".

[10] Cai JM, LiuRH, Deng CJ., "An assessment of biomass resources availability in Shanghai: 2005 analysis". Renew Sustainable Energy Rev 2008;12:1997–2004.

[11] Hossain AK, Badro., "Prospects of renewable energy utilization for electricity Generation in Bangladesh". Renew Sustainable Energy Rev 2007;11:1617–49.

[12] Bildirici Melike E., "Economic growth and biomass energy". Biomass Bioenergy 2012.

[13] Mohammad, S. B. (2005). "Bio-coal Briquette Cleaner, Affordable and Sustainable Fuel to Indonesia". Indonesia: Hulk-up Press.

[14] Mangena, S. J. & Cann,"Binderless Briquetting of Some Selected South Africa Prime Cooking. International Journal of Health Maintenance", Vol. 71. (45). Pp. 300-312.V. (2007).

[15] Md. Ahiduzzaman,"Production and Use of Densified Biofuel in Mymensingh District(Bangladesh) under Technical and Socio-economical Aspects", M.Sc thesis, International Institute of Management, University of Flensburg, Germany, 2006.

[16] P.k. Halder, N. Paul, M.R.A Beg,"Assessment of Biomass energy resources and related technologies practice in Bangladesh". Renewable and Sustainable Energy Reviews 39 (2014) 444–460

[16] http://www.jie.or.jp/biomass/AsiaBiomassHandbook/English/Part-0_E-080917.pdf

[17] https://www.bp.com/content/dam/bp/pdf/energy-economics/statistical-review-2017/bp- statistical-review-of-world-energy-2017-full-report.pdf

[18] http://www.bpdb.gov.bd/download/annual_report/Annual%20Report%202015-16.pdf

[19] https://www.worldenergy.org/wp-content/uploads/2016/10/World-Energy-Resources-Full-report-2016.10.03.pdf

[20] https://www.worldenergy.orgwpcontentuploads201309Complete_WER_2013_Survey.pdf

[21] https://www.bp.com/content/dam/bp/pdf/energy-economics/statistical-review-2016/bp-statistical-review-of-world-energy-2016-full-report.pdf

[22] http://www.ashden.org/briquettes

[23] http://www.sciencedomain.org/download.php?f=1360664972Davies212012JSRR1964.pdf93

[24] http://www.bp.com/content/dam/bp/pdf/Energy-economics/statistical-review-2014/BP-statistical-review-of-world-energy-2014-full-report.pdf

[25] S.C. Bhattacharya, "Biomass energy and densification: A Global Review with Emphasis on Developing Countries", Energy Program, Asian Institute of Technology.

[26] Dr. R. M. Singh, "Information and expertise regarding the history of the bio-briquette", Biomass Laboratory, Faculty of Technology, NAST 2008.

[27] http://en.wikipedia.org/wiki/Biomass_briquettes

[28] http://www.mncorn.org/sites/mncorn.org/files/research/finalreports/201206/Biomass Densification.pdf

[29] Kapil A.Pakhare, Dr.R.N.Baxi "Failure Analysis Of Taper Die Of Biomass Briquetting Machine: A Review" International Journal of Engineering and Social Science. Volume 2, Issue 10 (October 2012) ISSN: 2249- 9482

APPENDICES

Table No.1 (Composition of Different Samples & Analysis of Their Properties)

Sample No.	Composition (%)						Percentage(%) of				Calorific value (MJ/Kg)
	Rice Husk	Waste Paper	Saw Dust	Mustard Oil Cake	Sesame Oil Cake	Nigella Seed Oil Cake	Moisture Content	Volatile Matter Content	Ash Content	Fixed Carbon Content	
1	100	0	0	0	0	0	8.48	4.52	10.34	76.66	14.2
2	50	30	0	20	0	0	6.4	6.37	4.9	82.33	14.515
3	50	30	0	0	20	0	6.34	6.437	4.48	82.743	14.46
4	50	30	0	0	0	20	6.007	6.85	4.36	82.783	14.4
5	50	40	0	10	0	0	5.418	6.795	5.82	81.967	14.6
6	50	40	0	0	10	0	4.986	6.83	5.04	83.144	14.56
7	50	40	0	0	0	10	5.71	7.076	5.34	81.874	14.52
8	50	20	30	0	0	0	6.18	4.602	6.12	83.098	14.74
9	50	10	40	0	0	0	6.22	4.82	6.82	82.14	14.68
10	60	20	20	0	0	0	5.92	4.55	6.28	83.25	14.71
11	90	0	0	0	10	0	4.29	6.186	11.62	77.90	14.27
12	90	0	0	0	0	10	6.36	5.523	11.42	76.697	14.22
13	90	0	10	0	0	0	4.76	6.736	10.94	77.562	14.31
14	90	10	0	0	0	0	3.12	4.36	9.74	82.599	14.33

Table No. 2 (Density of Different Samples)

Sample No.	**Density(Kg/m^3)**
Sample 1	915.4197322
Sample 2	919.9403235
Sample 3	938.0226886
Sample 4	944.8035755
Sample 5	916.832417
Sample 6	918.316091
Sample 7	947.1715043
Sample 8	926.7212104
Sample 9	958.4783641
Sample 10	943.6734277
Sample 11	957.2352015
Sample 12	959.7215266
Sample 13	934.8582747
Sample 14	923.4922166

Table No.3 (Percentage of Moisture Content of Different Samples)

Sample No.	**Moisture Content (%)**
Sample 1	8.48
Sample 2	6.4
Sample 3	6.34
Sample 4	6.007
Sample 5	5.418
Sample 6	4.986
Sample 7	5.71
Sample 8	6.18
Sample 9	6.22
Sample 10	5.92
Sample 11	4.29
Sample 12	6.36
Sample 13	4.76
Sample 14	3.12

Table No.4 (Percentage of Volatile Matter Content of Different Samples)

Sample No.	**Volatile Matter Content (%)**
Sample 1	4.52
Sample 2	6.37
Sample 3	6.437
Sample 4	6.85
Sample 5	6.795
Sample 6	6.83
Sample 7	7.076
Sample 8	4.602
Sample 9	4.82
Sample 10	4.55
Sample 11	6.186
Sample 12	5.523
Sample 13	6.736
Sample 14	4.36

Table No.5 (Percentage of Fixed Carbon Content of Different Samples)

Sample No.	**Fixed Carbon Content (%)**
Sample 1	76.66
Sample 2	82.33
Sample 3	82.743
Sample 4	82.783
Sample 5	81.967
Sample 6	83.144
Sample 7	81.874
Sample 8	83.098
Sample 9	82.14
Sample 10	83.25
Sample 11	77.90
Sample 12	76.697
Sample 13	77.562
Sample 14	82.599

Table No. 6 (Percentage of Ash Content of Different Samples)

Sample No.	**Ash Content (%)**
Sample 1	10.34
Sample 2	4.9
Sample 3	4.48
Sample 4	4.36
Sample 5	5.82
Sample 6	5.04
Sample 7	5.34
Sample 8	6.12
Sample 9	6.82
Sample 10	6.28
Sample 11	11.62
Sample 12	11.42
Sample 13	10.94
Sample 14	9.74

Table No.7 (Calorific Value of Different Samples)

Sample No.	Calorific Value MJ/Kg
Sample 1	14.2
Sample 2	14.515
Sample 3	14.46
Sample 4	14.4
Sample 5	14.6
Sample 6	14.56
Sample 7	14.52
Sample 8	14.74
Sample 9	14.68
Sample 10	14.71
Sample 11	14.27
Sample 12	14.22
Sample 13	14.31
Sample 14	14.33

Table No.8 (Percentage of Hydro Power in Different Countries)

Country	2011	2012	2013	2014	2015
USA	73	63.1	61.4	59.3	57.4
Canada	85	86.1	88.7	86.6	86.7
Brazil	96.9	94	88.5	84.5	81.7
Russia	37.3	37.3	41.3	39.7	38.5
China	158.2	197.3	208.2	242.8	254.9
India	29.8	26.2	29.8	29.6	28.1
Bangladesh	0.2	0.2	0.2	0.1	0.2

Table No.9 (Share of Biofuel Production by Region in Percentages (%))

Region	1993	2003	2013	2014
Asia Pacific		3.3	9.5	10.5
Africa				1
Middle East				
Europe & Eurasia		1.1	11.1	17.1
S. & Cent. America		71.4	49.2	28.5
North America		27.4	36.4	44.8

Table No.10 Aspect Ratio and Equivalent Weight

Sample No.	Aspect Ratio	Equivalent Weight(gm)
Sample 1	0.88	162
Sample 2	0.88	162.8
Sample 3	0.88	166
Sample 4	0.88	167.2
Sample 5	0.88	162.25
Sample 6	0.88	162.51
Sample 7	0.88	167.62
Sample 8	0.88	164
Sample 9	0.88	169.62
Sample 10	0.88	167
Sample 11	0.88	169.4
Sample 12	0.88	169.84
Sample 13	0.88	168.08
Sample 14	0.88	163.43

Table No.11 Quantity of Water

Sample No.	Water
Sample 1	700
Sample 2	1000
Sample 3	1000
Sample 4	1000
Sample 5	700
Sample 6	700
Sample 7	700
Sample 8	800
Sample 9	800
Sample 10	700
Sample 11	700
Sample 12	700
Sample 13	700
Sample 14	700

Table No. 12(Weight Decreasing(gm) of Different Samples)

Sample	**Day 1**	**Day 2**	**Day 3**	**Day 4**	**Day 5**
Sample 1	162	144	120	100	88
Sample 9	154	134	124	114	97

Sample 10	167	144	134	122	78

Sample Calculation:

The calorific value of Briquette sample was determined by burning 1gm sample in powder form in a bomb calorimeter. The data and results are given below:

Calorimeter. parr 1341 plain Oxygen Bomb Calorimeter and Thermometer : Parr 6775 Digital Thermometer was used , where Thermometer can measure temperature from 0.0001^0c

☐ Calorific Value of Rice Husk Sample No. 1 calculation is given below:

Weight of empty pan : 13.481gm

Weight of pan + Sample : 14.481gm

Weight of Water : 2000gm

Total Length of fuse wire used : 10cm

Unburned fuse wire : 1.8cm

Fuse wire actually burnt, C_3 : 8.2cm

Calorimeter Value off use wire : 2426cal/cm

Room Temperature : 24.358 ^{0}c

Data Table 13:

Time (min)	Digital Thermometer Reading (^{0}c)	Time (min)	Digital Thermometer Reading (^{0}c)
0	23.311	8.30	25.051
1	23.574	9.00	25.091
2	23.626	9.30	25.119
3	23.653	10.00	25.138
4	23.667	10.30	25.153
5 Fire	23.675	11.00	25.166
5.15	23.686	12	25.176
5.30	23.803	13	25.185
5.45	24.021	14	25.188
6.00	24.239	15	25.189
6.15	24.345	16	25.189
6.30	24.430	17	25.188
6.45	24.530	18	25.187
7.00	24.768	19	25.186

7.15	24.832	20	25.185
7.30	24.900	21	25.184
7.45	24.954	22	25.183
8.00	24.989	23	25.182

Time of Firing, a =5 min

Time when temp reaches 60% of total raise, b = 6.48 min

Time at beginning of period in which the rate of temp changes has become constant, c = 15 min

Temp at time of Firing, Ta = 23.675^0C

Temp at Time c, T_c = 25.189^0C

Rate at which the temp was raising during the 5 period firing, r_1 =0.0712^0C per min

Rate at which the temp was raising during the 5 period after time c, r_2 =0.0008^0C per min

Energy equivalent of the calorimeter determined under standardization, W=2426 calories /^{0}C

Mass of Samples in Grams, m = 1gm

Correction in calories for heat of combustion of fuse wire, e_3 =2.3×c_3=2.3×8.2=18.86

So, Temp raise T = T_c- Ta - r_1(b-a) - r_2 (c-b)

=25.189-23.675-0.0712(6.48-5)-0.0008(15-6.48)

= 1.401808^0C

So, Calorific Value = (T_W - e_3)/m

= (1.401808× 2426 – 18.86)/1 Cal/gm

= 3381.1926208 Cal/gm

=14.20409007 MJ/ Kg

=14.2 MJ/ Kg

☐ Calorific Value of Sample No. 2 calculation is given below:

Weight of empty pan : 13.473gm

Weight of pan + Sample : 14.47gm

Weight of Water : 2000gm

Total Length of fuse wire used : 10 cm

Unburned fuse wire : 1 cm

Fuse wire actually burnt, c_3 : 9cm

Calorimeter Value off use wire : 2426cal/cm

Room Temperature : 29.896 ^{0}c

Data Table 14:

Time (min)	Digital Thermometer Reading (^{0}c)	Time (min)	Digital Thermometer Reading (^{0}c)
0	27.735	8.30	29.562
1	27.920	9.00	29.595
2	28.102	9.30	29.626
3	28.133	10.00	29.645
4	28.140	10.30	29.658
5 Fire	28.145	11.00	29.670
5.15	28.165	12	29.683
5.30	28.293	13	29.689
5.45	28.521	14	29.692
6.00	28.669	15	29.694
6.15	28.868	16	29.695
6.30	29.043	17	29.696
6.45	29.148	18	29.695
7.00	29.268	19	29.694
7.15	29.332	20	29.693
7.30	29.392	21	29.692
7.45	29.460	22	29.691
8.00	29.493	23	29.690

Time of Firing, a =5 min

Time when temp reaches 60% of total raise, b =6.35 min

Time at beginning of period in which the rate of temp changes has become constant, c = 17 min

Temp at time of Firing, Ta = 28.145^{0}C

Temp at Time c, T_c = 29.696^{0}C

Rate at which the temp was raising during the 5 period firing, r_1 =0.081^{0}C per min

Rate at which the temp was raising during the 5 period after time c, r_2 =0.0008^{0}C per min

Energy equivalent of the calorimeter determined under standardization, W=2426 calories /^{0}C

Mass of Samples in Grams, m = 1gm

Correction in calories for heat of combustion of fuse wire, $e_3 = 2.3 \times c_3 = 2.3 \times 9 = 20.7$

So, Temp raise $T = T_c - Ta - r_1(b-a) - r_2(c-b)$

$= 29.696 - 28.145 - 0.081(6.35-5) - 0.0008(17-6.35)$

$= 1.43313^0C$

So, Calorific Value $= (T_W - e_3)/m$

$= (1.43313 \times 2426 - 20.7)/1$ Cal/gm

= 3456.07338Cal/gm

=14.515 MJ/ Kg

=14.515 MJ/ Kg

☐ Calorific Value of Sample No. 3 calculation is given below:

Weight of empty pan : 13.473gm

Weight of pan + Sample : 14.473gm

Weight of Water : 2000gm

Total Length of fuse wire used : 10 cm

Unburned fuse wire : 2 cm

Fuse wire actually burnt, c_3 : 8 cm

Calorimeter Value off use wire : 2426cal/cm

Room Temperature : 28.980^0c

Data Table 15:

Time (min)	Digital Thermometer Reading (^0c)	Time (min)	Digital Thermometer Reading (^0c)
0	27.510	8.30	29.125
1	27.705	9.00	29.176
2	27.755	9.30	29.197
3	27.772	10.00	29.224
4	27.778	10.30	29.246
5 Fire	27.783	11.00	29.252
5.15	27.794	12	29.267
5.30	27.882	13	29.282
5.45	28.037	14	29.288

6.00	28.125	15	29.293
6.15	28.350	16	29.296
6.30	28.511	17	29.298
6.45	28.637	18	29.299
7.00	28.786	19	29.298
7.15	28.828	20	29.297
7.30	28.888	21	29.296
7.45	28.96	22	29.295
8.00	29.048	23	29.294

Time of Firing, a =5 min

Time when temp reaches 60% of total raise, b = 6.51 min

Time at beginning of period in which the rate of temp changes has become constant, c = 18 min

Temp at time of Firing, Ta = 27.783^0C

Temp at Time c, T_c = 29.299^0C

Rate at which the temp was raising during the 5 period firing, r_1 =0.0536^0C per min

Rate at which the temp was raising during the 5 period after time c, r_2 =0.0008^0C per min

Energy equivalent of the calorimeter determined under standardization, W=2426 calories /^{0}C

Mass of Samples in Grams, m = 1gm

Correction in calories for heat of combustion of fuse wire, e_3 =2.3×c_3=2.3×8=18.4

So, Temp raise T = T_c- Ta - r_1(b-a) - r_2 (c-b)

=29.299-27.783-0.0536(6.51-5)-0.0008(18-6.51)

= 1.426772^0C

So, Calorific Value = (T_W - e_3)/m

= (1.426772× 2426 – 18.4)/1 Cal/gm

= 3442.948872 Cal/gm

=14.46038526 MJ/ Kg

=14.46 MJ/ Kg

☐ Calorific Value of Sample No. 4 calculation is given below:

Weight of empty pan : 13.476gm

Weight of pan + Sample : 14.476gm

Weight of Water : 2000gm

Total Length of fuse wire used : 10cm

Unburned fuse wire : 2cm

Fuse wire actually burnt, c_3 : 8cm

Calorimeter Value off use wire : 2426cal/cm

Room Temperature : 31.225^0c

Data Table 16:

Time (min)	Digital Thermometer Reading (^{0}c)	Time (min)	Digital Thermometer Reading (^{0}c)
0	29.697	8.30	31.560
1	29.883	9.00	31.611
2	30.015	9.30	31.637
3	30.113	10.00	31.661
4	30.154	10.30	31.673
5 Fire	30.160	11.00	31.685
5.15	30.176	12	31.696
5.30	30.350	13	31.702
5.45	30.599	14	31.707
6.00	30.783	15	31.710
6.15	30.878	16	31.712
6.30	31.042	17	31.713
6.45	31.231	18	31.712
7.00	31.285	19	31.711
7.15	31.323	20	31.710
7.30	31.416	21	31.709
7.45	31.473	22	31.708
8.00	30.507	23	31.707

Time of Firing, a =5 min

Time when temp reaches 60% of total raise, b = 6.35 min

Time at beginning of period in which the rate of temp changes has become constant, c = 17 min

Temp at time of Firing, Ta = 30.160^0C

Temp at Time c, T_c = 31.713^0C

Rate at which the temp was raising during the 5 period firing, r_1 =0.0914^0C per min

Rate at which the temp was raising during the 5 period after time c, r_2 =0.0008^{0}C per min

Energy equivalent of the calorimeter determined under standardization, W=2426 calories /^{0}C

Mass of Samples in Grams, m = 1gm

Correction in calories for heat of combustion of fuse wire, $e_3 = 2.3 \times c_3 = 2.3 \times 8 = 18.4$

So, Temp raise $T = T_c - Ta - r_1(b-a) - r_2(c-b)$

=31.713-30.160-0.0914(6.35-5)-0.0008(17-6.35)

= 1.42109^{0}C

So, Calorific Value = $(T_W - e_3)/m$

= (1.42109×2426 – 18.4)/1 Cal/gm

= 3429.16434 Cal/gm

=14.40249023 MJ/ Kg

=14.40 MJ/ Kg

☐ Calorific Value of Sample No. 5 calculation is given below:

Weight of empty pan : 13.478gm

Weight of pan + Sample : 14.478gm

Weight of Water : 2000gm

Total Length of fuse wire used : 10cm

Unburned fuse wire : 0.5cm

Fuse wire actually burnt, c_3 : 9.5cm

Calorimeter Value off use wire : 2466cal/cm

Room Temperature : 31.166^{0}c

Data Table 17:

Time (min)	Digital Thermometer Reading (^{0}c)	Time (min)	Digital Thermometer Reading (^{0}c)
0	29.295	8.30	31.115
1	29.478	9.00	31.151
2	29.546	9.30	31.179
3	29.655	10.00	31.196

4	29.689	10.30	31.212
5 Fire	29.701	11.00	31.227
5.15	29.708	12	31.237
5.30	29.834	13	31.245
5.45	30.059	14	31.250
6.00	30.217	15	31.254
6.15	30.397	16	31.256
6.30	30.565	17	31.257
6.45	30.715	18	31.256
7.00	30.817	19	31.255
7.15	30.878	20	31.254
7.30	30.948	21	31.253
7.45	31.003	22	31.252
8.00	31.053	23	31.251

Time of Firing, a =5 min

Time when temp reaches 60% of total raise, b =6.36 min
Time at beginning of period in which the rate of temp changes has become constant, c = 17 min

Temp at time of Firing, Ta = 29.701^0C

Temp at Time c, T_c =31.257 ^{0}C

Rate at which the temp was raising during the 5 period firing, r_1 =0.0788^0C per min

Rate at which the temp was raising during the 5 period after time c, r_2 =0.0008^0C per min

Energy equivalent of the calorimeter determined under standardization, W=2426 calories /^{0}C

Mass of Samples in Grams, m = 1gm

Correction in calories for heat of combustion of fuse wire, e_3 =2.3×c_3=2.3×8=18.4

So, Temperature raise T = T_c- Ta - r_1(b-a) - r_2 (c-b)

=31.257-29.701-0.0788(6.36-5)-0.0008(17-6.36)

= 1.556- 0.0788 ×1.36-0.0008 × 10.64

= 1.44032^0C

So, Calorific Value = (T_W - e_3)/m

= (1.44032×2426 – 18.4)/1 Cal/gm

= 3475.81632Cal/gm

=14.59842854 MJ/ Kg

=14.60 MJ/ Kg

☐ Calorific Value of Sample No. 6 calculation is given below:

Weight of empty pan : 13.480gm

Weight of pan + Sample : 14.480gm

Weight of Water : 2000gm

Total Length of fuse wire used : 10cm

Unburned fuse wire : 1.3cm

Fuse wire actually burnt, c_3 : 8.7cm

Calorimeter Value off use wire : 2426 cal/cm

Room Temperature : 30.946 ^{0}c

Data Table 18:

Time (min)	Digital Thermometer Reading (^{0}c)	Time (min)	Digital Thermometer Reading (^{0}c)
0	29.283	8.30	31.045
1	29.448	9.00	31.087
2	29.558	9.30	31.118
3	29.620	10.00	31.141
4	29.640	10.30	31.153
5 Fire	29.648	11.00	31.162
5.15	29.652	12	31.176
5.30	29.697	13	31.184
5.45	29.932	14	31.188
6.00	30.051	15	31.191
6.15	30.328	16	31.192
6.30	30.516	17	31.193
6.45	30.624	18	31.192
7.00	30.718	19	31.191
7.15	30.776	20	31.190
7.30	30.862	21	31.189
7.45	30.925	22	31.188
8.00	30.987	23	31.187

Time of Firing, a =5 min

Time when temp reaches 60% of total raise, b = 6.39 min

Time at beginning of period in which the rate of temp changes has become constant, c = 17 min

Temp at time of Firing, Ta = 29.648^0C

Temp at Time c, T_c = 31.193^0C

Rate at which the temp was raising during the 5 period firing, r_1 =0.0714^0C per min

Rate at which the temp was raising during the 5 period after time c, r_2 =0.0008^0C per min

Energy equivalent of the calorimeter determined under standardization, W=2426 calories /^{0}C

Mass of Samples in Grams, m = 1gm

Correction in calories for heat of combustion of fuse wire, e_3 =2.3×c_3=2.3×8.7=20.01

So, Temp raise T = T_c- Ta - r_1(b-a) - r_2 (c-b)

=31.193-29.648-0.0714(6.39-5)-0.0008(17-6.39)

= 1.4437266^0C

So, Calorific Value = (T_W - e_3)/m

= (1.4437266×2426 – 20.01)/1 Cal/gm

= 3466.797316 Cal/gm

=14.56054873 MJ/ Kg

=14.56 MJ/ Kg

☐ Calorific Value of Sample No.7 calculation is given below:

Weight of empty pan	: 13.481gm
Weight of pan + Sample	: 14.481gm
Weight of Water	: 2000gm
Total Length of fuse wire used	: 10cm
Unburned fuse wire	: 1cm
Fuse wire actually burnt, c_3	: 9cm
Calorimeter Value off use wire	: 2426 cal/cm
Room Temperature	: 31.349^0c

Data Table 19:

Time (min)	Digital Thermometer Reading (^{0}c)	Time (min)	Digital Thermometer Reading (^{0}c)
0	29.687	8.30	31.427
1	29.830	9.00	31.469
2	29.923	9.30	31.490
3	29.985	10.00	31.512
4	30.015	10.30	31.526
5 Fire	30.022	11.00	31.534
5.15	30.042	12	31.545
5.30	30.164	13	31.551
5.45	30.284	14	31.554
6.00	30.480	15	31.555
6.15	30.738	16	31.555
6.30	30.888	17	31.554
6.45	31.015	18	31.554
7.00	31.092	19	31.553
7.15	31.192	20	31.552
7.30	31.252	21	31.551
7.45	31.312	22	31.550
8.00	31.370	23	31.549

Time of Firing, a =5 min

Time when temp reaches 60% of total raise, b = 6.43 min

Time at beginning of period in which the rate of temp changes has become constant, c = 15 min

Temp at time of Firing, Ta = 30.022^{0}C

Temp at Time c, T_c = 31.555^{0}C

Rate at which the temp was raising during the 5 period firing, r_1 =0.0656^{0}C per min

Rate at which the temp was raising during the 5 period after time c, r_2 =0.0006^{0}C per min

Energy equivalent of the calorimeter determined under standardization, W=2426 calories /^{0}C

Mass of Samples in Grams, m = 1gm

Correction in calories for heat of combustion of fuse wire, $e_3 = 2.3 \times c_3 = 2.3 \times 9 = 20.7$

So, Temp raise T = T_c- Ta - r_1(b-a) - r_2 (c-b)

=31.555-30.022-0.0656(6.43-5)-0.0006(15-6.43)

= 1.43605^{0}C

So, Calorific Value = (T_W - e_3)/m

= (1.43605× 2426 – 20.7)/1 Cal/gm

= 3458.3053 Cal/gm

=14.52488226 MJ/ Kg

=14.52 MJ/ Kg

☐ Calorific Value of Sample No. 8 calculation is given below:

Weight of empty pan : 13.473gm

Weight of pan + Sample : 14.473gm

Weight of Water : 2000gm

Total Length of fuse wire used : 10cm

Unburned fuse wire : 2cm

Fuse wire actually burnt, c_3 : 8cm

Calorimeter Value off use wire : 2426 cal/cm

Room Temperature : 28.990 ^{0}c

Data Table 20:

Time (min)	Digital Thermometer Reading (^{0}c)	Time (min)	Digital Thermometer Reading (^{0}c)
0	27.246	8.30	28.962
1	27.426	9.00	29.002
2	27.518	9.30	29.033
3	27.540	10.00	29.052
4	27.552	10.30	29.068
5 Fire	27.561	11.00	29.076
5.15	27.574	12	29.089
5.30	27.669	13	29.098
5.45	27.965	14	29.102
6.00	28.192	15	29.105
6.15	28.303	16	29.107
6.30	28.416	17	29.108

6.45	28.543	18	29.107
7.00	28.675	19	29.106
7.15	28.745	20	29.105
7.30	28.799	21	29.104
7.45	28.859	22	29.103
8.00	28.894	23	29.102

Time of Firing, a =5 min

Time when temp reaches 60% of total raise, b = 6.38 min

Time at beginning of period in which the rate of temp changes has become constant, c = 17 min

Temp at time of Firing, Ta = 27.561^0C

Temp at Time c, T_c = 29.108^0C

Rate at which the temp was raising during the 5 period firing, r_1 =0.0612^0C per min

Rate at which the temp was raising during the 5 period after time c, r_2 =0.0008^0C per min

Energy equivalent of the calorimeter determined under standardization, W=2426 calories /^{0}C

Mass of Samples in Grams, m = 1gm

Correction in calories for heat of combustion of fuse wire, e_3 =2.3×c_3=2.3×8=18.4

So, Temp raise T = T_c- Ta - r_1(b-a) - r_2 (c-b)

=29.108-27.561-0.0612(6.38-5)-0.0008(17-6.38)

= 1.454048^0C

So, Calorific Value = (T_W - e_3)/m

= (1.454048×2426 – 18.4)/1 Cal/gm

= 3509.120448 Cal/gm

=14.73830588 MJ/ Kg

=14.74 MJ/ Kg

☐ Calorific Value of Sample No. 9 calculation is given below:

Weight of empty pan : 13.484gm

Weight of pan + Sample : 14.484gm

Weight of Water : 2000gm

Total Length of fuse wire used : 10cm

Unburned fuse wire : 2cm

Fuse wire actually burnt, c_3 : 8cm

Calorimeter Value off use wire : 2426 cal/cm

Room Temperature : 24.352^0c

Data Table 21:

Time (min)	Digital Thermometer Reading (^{0}c)	Time (min)	Digital Thermometer Reading (^{0}c)
0	23.353	8.30	24.791
1	23.462	9.00	24.848
2	23.487	9.30	24.908
3	23.501	10.00	24.937
4	23.509	10.30	24.957
5 Fire	23.512	11.00	24.975
5.15	23.523	12	25.001
5.30	23.592	13	25.009
5.45	23.725	14	25.013
6.00	23.883	15	25.014
6.15	24.084	16	25.014
6.30	24.196	17	25.014
6.45	24.326	18	25.013
7.00	24.448	19	25.012
7.15	24.504	20	25.011
7.30	24.588	21	25.010
7.45	24.660	22	25.009
8.00	24.716	23	25.008

Time of Firing, a =5 min

Time when temp reaches 60% of total raise, b = 6.56 min

Time at beginning of period in which the rate of temp changes has become constant, c = 15 min

Temp at time of Firing, Ta = 23.512^0C

Temp at Time c, T_c = 25.014^0C

Rate at which the temp was raising during the 5 period firing, r_1 =0.0312^0C per min

Rate at which the temp was raising during the 5 period after time c, r_2 =0.0006^0C per min

Energy equivalent of the calorimeter determined under standardization, W=2426 calories /^{0}C

Mass of Samples in Grams, m = 1gm

Correction in calories for heat of combustion of fuse wire, $e_3 = 2.3 \times c_3 = 2.3 \times 8 = 18.4$

So, Temp raise $T = T_c - Ta - r_1(b-a) - r_2(c-b)$

=25.014-23.512-0.0312(6.56-5)-0.0006(15-6.56)

= 1.448264^{0}C

So, Calorific Value = $(T_W - e_3)/m$

= (1.448264×2426 – 18.4)/1 Cal/gm

= 3495.088464Cal/gm

=14.6793715488 MJ/ Kg

=14.68 MJ/ Kg

☐ Calorific Value of Sample No.10 calculation is given below:

Weight of empty pan : 13.484gm

Weight of pan + Sample : 14.484gm

Weight of Water : 2000gm

Total Length of fuse wire used : 10cm

Unburned fuse wire : 2.2cm

Fuse wire actually burnt, c_3 : 7.8cm

Calorimeter Value off use wire : 2426 cal/cm

Room Temperature : 24.352^{0}c

Data Table 22:

Time (min)	Digital Thermometer Reading (^{0}c)	Time (min)	Digital Thermometer Reading (^{0}c)
0	23.001	8.30	24.778
1	23.194	9.00	24.808
2	23.286	9.30	24.833
3	23.315	10.00	24.853
4	23.331	10.30	24.868

5 Fire	23.350	11.00	24.878
5.15	23.388	12	24.883
5.30	23.554	13	24.887
5.45	23.779	14	24.890
6.00	23.979	15	24.892
6.15	24.154	16	24.893
6.30	24.304	17	24.892
6.45	24.429	18	24.891
7.00	24.529	19	24.890
7.15	24.604	20	24.889
7.30	24.654	21	24.888
7.45	24.699	22	24.887
8.00	24.739	23	24.886

Time of Firing, a =5 min

Time when temp reaches 60% of total raise, b = 6.27 min

Time at beginning of period in which the rate of temp changes has become constant, c = 16 min

Temp at time of Firing, Ta = 23.350^0C

Temp at Time c, T_c = 24.893^0C

Rate at which the temp was raising during the 5 period firing, r_1 =0.066^0C per min

Rate at which the temp was raising during the 5 period after time c, r_2 =0.0008^0C per min

Energy equivalent of the calorimeter determined under standardization, W=2426 calories /^{0}C

Mass of Samples in Grams, m = 1gm

Correction in calories for heat of combustion of fuse wire, e_3 =2.3×c_3=2.3×7.8=17.94

So, Temp raise T = T_c- Ta - r_1(b-a) - r_2 (c-b)

=24.893-23.350-0.066(6.27-5)-0.0008(16-6.27)

= 1.451396^0C

So, Calorific Value = (T_W - e_3)/m

= (1.451396×2426 – 17.94)/1 Cal/gm

= 3503.146696 Cal/gm

=14.7132161232 MJ/ Kg

=14.71 MJ/ Kg

☐ Calorific Value of Sample No. 11 calculation is given below:

Weight of empty pan : 13.42gm

Weight of pan + Sample : 14.42gm

Weight of Water : 2000gm

Total Length of fuse wire used : 10cm

Unburned fuse wire : 1cm

Fuse wire actually burnt, c_3 : 9cm

Calorimeter Value off use wire : 2426 cal/cm

Room Temperature : 28.173^0c

Data Table 23:

Time (min)	Digital Thermometer Reading (^{0}c)	Time (min)	Digital Thermometer Reading (^{0}c)
0	26.986	8.30	28.638
1	27.115	9.00	28.674
2	27.124	9.30	28.695
3	27.135	10.00	28.716
4	27.200	10.30	28.730
5 Fire	27.285	11.00	28.740
5.15	27.289	12	28.745
5.30	27.343	13	28.750
5.45	27.574	14	28.754
6.00	27.798	15	28.758
6.15	28.014	16	28.761
6.30	28.166	17	28.762
6.45	28.254	18	28.761
7.00	28.259	19	28.760
7.15	28.433	20	28.759
7.30	28.500	21	28.758
7.45	28.538	22	28.757
8.00	28.572	23	28.756

Time of Firing, a =5 min

Time when temp reaches 60% of total raise, b = 6.31min

Time at beginning of period in which the rate of temp changes has become constant, c = 17 min

Temp at time of Firing, Ta = 27.285^0C

Temp at Time c, T_c = 28.762^0C

Rate at which the temp was raising during the 5 period firing, r_1 = 0.0428^0C per min

Rate at which the temp was raising during the 5 period after time c, r_2 =0.0008^0C per min

Energy equivalent of the calorimeter determined under standardization, W=2426 calories /^{0}C

Mass of Samples in Grams, m = 1gm

Correction in calories for heat of combustion of fuse wire, e_3 =2.3×c_3=2.3× 9 =20.7

So, Temp raise T = T_c- Ta - r_1(b-a) - r_2 (c-b)

=28.762-27.285-0.0428(6.31-5)-0.0008(21-6.31)

= 1.40918^0C

So, Calorific Value = (T_W - e_3)/m

= (1.40918×2426 –20.7)/1 Cal/gm

= 3397.97068 Cal/gm

= 14.27147686 MJ/ Kg

= 14.27MJ/ Kg

☐ Calorific Value of Sample No. 12 calculation is given below:

Weight of empty pan	: 13.42gm
Weight of pan + Sample	: 14.42gm
Weight of Water	: 2000gm
Total Length of fuse wire used	: 10cm
Unburned fuse wire	: 3cm
Fuse wire actually burnt, c_3	: 7cm
Calorimeter Value off use wire	: 2426 cal/cm
Room Temperature	: 29.600 ^{0}c

Data Table 24:

Time (min)	Digital Thermometer Reading (^{0}c)	Time (min)	Digital Thermometer Reading (^{0}c)
0	28.306	8.30	29.731
1	28.325	9.00	29.759
2	28.341	9.30	29.769
3	28.362	10.00	29.788
4	28.380	10.30	29.797
5 Fire	28.400	11.00	29.804
5.15	28.550	12	29.810
5.30	28.896	13	29.817
5.45	29.045	14	29.821
6.00	29.186	15	29.827
6.15	29.287	16	29.829
6.30	29.415	17	29.830
6.45	29.487	18	29.831
7.00	29.546	19	29.830
7.15	29.591	20	29.829
7.30	29.635	21	29.828
7.45	29.665	22	29.827
8.00	29.694	23	29.826

Time of Firing, a =5 min

Time when temp reaches 60% of total raise, b = 6.30 min

Time at beginning of period in which the rate of temp changes has become constant, c = 18 min

Temp at time of Firing, Ta =28.400 ^{0}C

Temp at Time c, T_c = 29.831^{0}C

Rate at which the temp was raising during the 5 period firing, r_1 = 0.0148^{0}C per min

Rate at which the temp was raising during the 5 period after time c, r_2 =0.0008^{0}C per min

Energy equivalent of the calorimeter determined under standardization, W=2426 calories /^{0}C

Mass of Samples in Grams, m = 1gm

Correction in calories for heat of combustion of fuse wire, e_3 =2.3×c_3=2.3× 7 =16.1

So, Temp raise $T = T_c - Ta - r_1(b-a) - r_2(c-b)$

=29.831-28.400-0.0148(6.30-5)-0.0008(18-6.30)

= 1.4024^0C

So, Calorific Value = $(T_W - e_3)/m$

= (1.4024×2426 –16.1)/1 Cal/gm

= 3386.1224Cal/gm

= 14.22171408MJ/ Kg

= 14.22MJ/ Kg

☐ Calorific Value of Sample No.13 calculation is given below:

Weight of empty pan : 13.42gm

Weight of pan + Sample : 14.42gm

Weight of Water : 2000gm

Total Length of fuse wire used : 10cm

Unburned fuse wire : 3cm

Fuse wire actually burnt, c_3 : 7cm

Calorimeter Value off use wire : 2426 cal/cm

Room Temperature : 29^0c

Data Table 25:

Time (min)	Digital Thermometer Reading (^0c)	Time (min)	Digital Thermometer Reading (^0c)
0	27.808	8.30	29.472
1	27.980	9.00	29.502
2	28.035	9.30	29.530
3	28.063	10.00	29.548
4	28.086	10.30	29.559
5 Fire	28.114	11.00	29.566
5.15	28.173	12	29.579
5.30	28.342	13	29.586
5.45	28.750	14	29.590
6.00	28.846	15	29.594
6.15	29.015	16	29.596
6.30	29.100	17	29.597

6.45	29.198	18	29.598
7.00	29.258	19	29.597
7.15	29.321	20	29.596
7.30	29.363	21	29.595
7.45	29.394	22	29.594
8.00	29.433	23	29.593

Time of Firing, a =5 min

Time when temp reaches 60% of total raise, b = 6.14min

Time at beginning of period in which the rate of temp changes has become constant, c = 18 min

Temp at time of Firing, Ta = 28.114^0C

Temp at Time c, T_c = 29.598^0C

Rate at which the temp was raising during the 5 period firing, r_1 = 0.0556^0C per min

Rate at which the temp was raising during the 5 period after time c, r_2 =0.0008^0C per min

Energy equivalent of the calorimeter determined under standardization, W=2426 calories /^{0}C

Mass of Samples in Grams, m = 1gm

Correction in calories for heat of combustion of fuse wire, e_3 =2.3×c_3=2.3×7 =16.1

So, Temp raise T = T_c- Ta - r_1(b-a) - r_2 (c-b)

=29.598-28.114-0.0556(6.14-5)-0.0008(18-6.14)

= 1.411128^0C

So, Calorific Value = (T_W - e_3)/m

= (1.411128×2426 –16.1)/1 Cal/gm

= 3407.296528Cal/gm

= 14.31064542MJ/ Kg

= 14.31MJ/ Kg

☐ Calorific Value of Sample No. 14 calculation is given below:

Weight of empty pan : 13.42gm

Weight of pan + Sample : 14.42gm

Weight of Water : 2000gm

Total Length of fuse wire used : 10cm

Unburned fuse wire : 3.5cm

Fuse wire actually burnt, c_3 : 6.5cm

Calorimeter Value off use wire : 2426 cal/cm

Room Temperature : 27.9^0c

Data Table 26:

Time (min)	Digital Thermometer Reading (^{0}c)	Time (min)	Digital Thermometer Reading (^{0}c)
0	26.595	8.30	27.990
1	26.615	9.00	28.054
2	26.632	9.30	28.080
3	26.660	10.00	28.094
4	26.687	10.30	28.103
5 Fire	26.710	11.00	28.110
5.15	26.856	12	28.117
5.30	26.902	13	28.124
5.45	27.112	14	28.130
6.00	27.309	15	28.135
6.15	27.446	16	28.137
6.30	27.562	17	28.139
6.45	27.661	18	28.140
7.00	27.733	19	28.139
7.15	27.793	20	28.138
7.30	27.845	21	28.137
7.45	27.884	22	28.136
8.00	27.918	23	28.135

Time of Firing, a =5 min

Time when temp reaches 60% of total raise, b = 6.31 min
Time at beginning of period in which the rate of temp changes has become constant, c = 18min

Temp at time of Firing, Ta = 26.710^0C
Temp at Time c, T_c =28.140^0C

Rate at which the temp was raising during the 5 period firing, r_1 = 0.0184^0C per min
Rate at which the temp was raising during the 5 period after time c, r_2 =0.0008^0C per min

Energy equivalent of the calorimeter determined under standardization, W=2426 calories /^{0}C

Mass of Samples in Grams, m = 1gm

Correction in calories for heat of combustion of fuse wire, $e_3 = 2.3 \times c_3 = 2.3 \times 6.5 = 14.95$

So, Temp raise $T = T_c - Ta - r_1(b-a) - r_2(c-b)$

$= 28.140 - 26.700 - 0.0184(6.31-5) - 0.0008(18-6.31)$

$= 1.406544^0C$

So, Calorific Value = $(T_W - e_3)/m$

$= (1.406544 \times 2426 - 14.95)/1$ Cal/gm

= 3412.275744Cal/gm

= 14.33155812MJ/ Kg

= 14.33MJ/ Kg